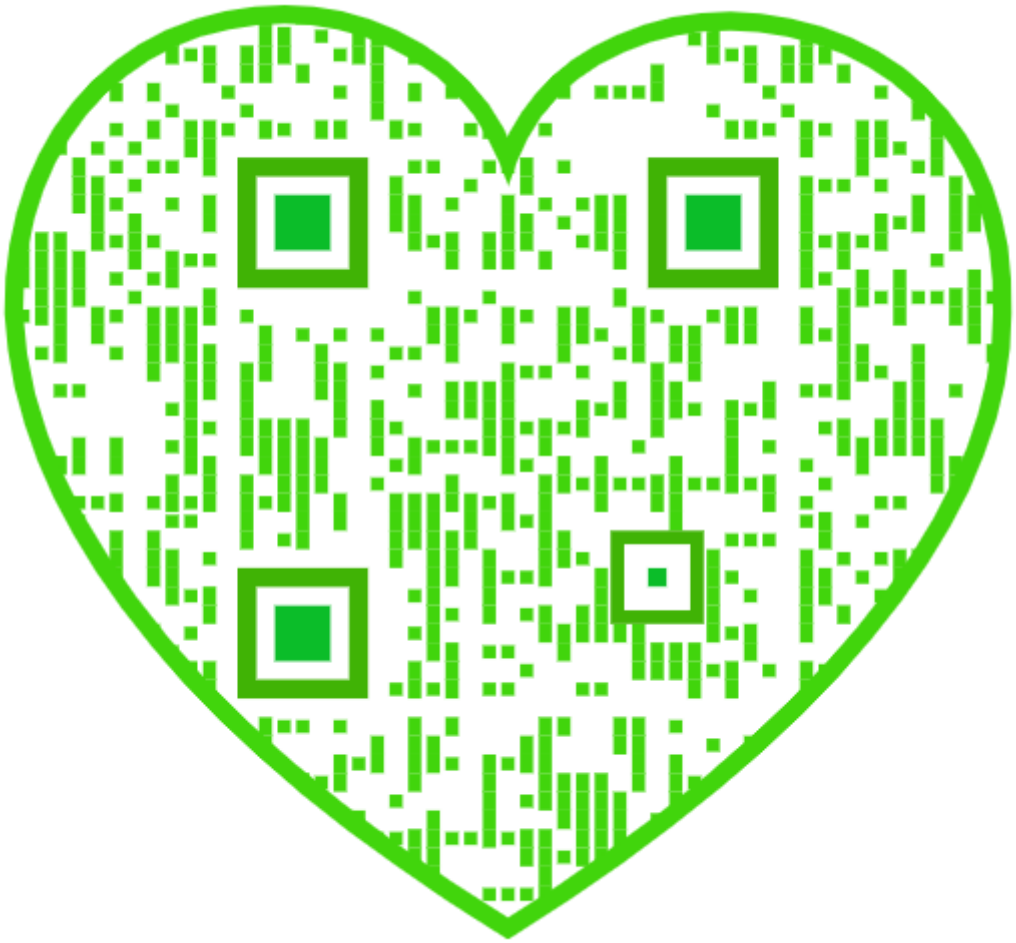

Electric Slag Welding

EDITED BY B. PATON,
PRESIDENT
OF THE UKRAINIAN ACADEMY OF SCIENCES,
LENIN PRIZE WINNER

FOREIGN LANGUAGES PUBLISHING HOUSE
MOSCOW

TRANSLATED FROM THE RUSSIAN BY B. KUZNETSOV

CONTENTS

Page

FOREWORD 5

Chapter I. ELECTRIC SLAG WELDING 7
1. Definitions 7
2. Classification 12
3. Features 17
4. Applications 19

Chapter II. WELD FORMATION IN ELECTRIC SLAG WELDING . . . 22
1. Heat Input and Distribution 22
2. Propagation of Heat in the Parent Metal 26
3. Welding Procedures and Their Effect on Weld Shape and Dimensions 29
4. Structure of Weld Metal in Electric Slag Welding 48

Chapter III. METALLURGY OF ELECTRIC SLAG WELDING 63
1. Reactions of Manganese and Silicon 64
2. Reactions of Chromium 71
3. Oxidation of Carbon 71
4. Reactions of Phosphorus and Sulphur 72
5. Effect of Welding Conditions on the Rate of Metallurgical Reactions 74
6. Effect of Type of Current and Polarity on Metallurgical Reactions 77
7. Behaviour of Gases in Electric Slag Welding 81
8. Fluxes for Electric Slag Welding 83
9. Electrodes for Electric Slag Welding 87

Chapter IV. TECHNIQUE OF ELECTRIC SLAG WELDING AND HARD-FACING 90
1. Types of Joints and Welds 90
2. Edge Preparation and Fit-up 95
3. Technique for Straight Seams 100
4. Technique for Circumferential Seams 107
5. Consumable Electrode-guide Technique 111
6. Welding Technique with Large-size Electrodes 116
7. Hard-facing by the Electric Slag Process 118
8. Electric Slag Welding in Repair of Thick-walled Articles and Machine Parts 124
9. Defects in Electric Slag Welds 128
10. Weld Inspection and Testing 139

Chapter V. DISTORTIONS AND THEIR CONTROL IN ELECTRIC SLAG WELDING 142
1. Distortions in Flat-plate Structures Joined by Straight Seams . . 142
2. Distortions in Corner Joints 146
3. Distortions in Welded Frames 146
4. Distortions In Slag-welded High-pressure High-temperature Boilers 148
5. Distortions in Circumferential Seams 150

Chapter VI. EQUIPMENT FOR ELECTRIC SLAG WELDING 153
1. Features of Design 153
2. Track-riding Electric Slag Welding Sets 155
3. Trackless Electric Slag Welding Equipment 170
4. Walking Magnet Welding Sets 175
5. Sets for Electric Slag Circumferential Seams 177
6. Equipment for Electric Slag Welding with Plate and Rod Electrodes 181
7. Sets for Welding with Consumable Electrode Guides 184
8. Electric Slag Welding Outfits 185

Chapter VII. POWER SOURCES AND AUTOMATIC CONTROL IN ELECTRIC SLAG WELDING 200
1. Power Sources for Electric Slag Welding 200
2. Automatic Control of Electric Slag Welding 205

Chapter VIII. WELDING PROCEDURES FOR CARBON AND ALLOY STRUCTURAL STEELS 217
1. Killed Carbon Steels 217
2. Rimmed Low-carbon Steels 234
3. Boiler Carbon Steels 237
4. Medium-alloy Steels 247
5. Austenitic Steels and Heat-resistant Alloys 267
6. Titanium 282
7. Cast Iron 287
8. Hard-facing by the Electric Slag Process 289

Chapter IX. ELECTRIC SLAG WELDING OF HIGH-PRESSURE VESSELS 299
1. Types of Welded Vessels 299
2. Slag-welded Vessels from Roll-formed Plate 303
3. Slag-welded Vessels from Pressed Plate 307
4. Heat Treatment of Thick-walled Boiler Drums and High-pressure Vessels 313
5 Distortions of Boilers Due to Heat Treatment in Gas-fired Furnaces and Their Control 315
6. Economic Gain and Technical Advantages 317

Chapter X. TYPICAL APPLICATIONS OF ELECTRIC SLAG WELDING 320
1. Rolled-welded Structures 321
2. Cast-welded Structures 332
3. Forged-welded Structures 344
4. Composite Structures from Plate, Forgings and Castings 351
5. Electric Slag Welding of Heavy-gauge Reinforcing Bars 359

FOREWORD

Electric slag welding is a fundamentally new method of permanently joining metals. It has been developed and put to practical use by the Paton Electric Welding Institute of the Ukrainian Academy of Sciences in collaboration with the Engineering Works at Novo-Kramatorsk and the Krasny Kotelshchik Boiler-Making Factory at Taganrog, both of which are leading plants in the field.

As distinct from other fusion welding methods, the electric slag process depends on the heat generated by the passage of an electric current from the welding rod (electrode) to the workpiece through the molten pool of a high-resistance conductive flux, or slag. Hence its name—electric slag process.

Submerged arc welding has proved less efficient on thicknesses over 50 or 60 mm than on lighter sections. This is because of the difficulty and, at times, impossibility of making well-shaped welds with strong arcs in the downhand position in a single pass. Therefore, heavy-gauge plate has to be bevelled prior to welding and welded in many passes—which is out of pace with modern heavy engineering practice.

Electric slag welding is a big step forward, as this process, coupled with weld moulding, has rendered possible the single-pass welding of plate of practically unlimited thickness.

The electric slag process will inevitably bring about sweeping changes in the fabrication of large-size structures, unique machines, heavy presses, large shafts, etc. With electric slag welding, all-cast and forged parts may be replaced with cast-welded, forged-welded, and rolled-welded parts, thus reducing the burden on the foundries and forging shops of engineering works and stepping up production without having to expand floor space.

Electric slag welding has opened up new possibilities for the manufacture of composite and compound metals, automatic hard-facing and repair.

In recent years, further headway has been made in the science and art of electric slag welding, which has found many applications in heavy engineering and many other industries.

With Soviet help, the electric slag process is now being employed in Czechoslovakia, the German Democratic Republic, Poland and People's China.

Equipment for electric slag welding evoked keen interest at the World Fair in Brussels in 1958, where the electric slag process won a Grand Prix, and at Soviet exhibitions in New York, Marseille and Helsinki in 1959. Licences for the process and equipment have been bought by the ESAB of Sweden.

The obvious advantages, both technical and economic, that the electric slag process possesses in comparison with other methods and processes of fusion welding of heavy sections have appealed to welding people in some Western countries. In 1959, equipment for electric slag welding went into production in Britain and West Germany.

Recently, new modifications of the process have been developed—welding with large-size electrodes, welding with consumable electrode guides, and resistance slag welding. Electric slag processes have found applications in metal mak-

ing—for resmelting alloy steels and alloys, burning off risers and gates from odd-shaped castings, and repair of ingots.

Furthermore, new data have been obtained as to the heat and metallurgical phenomena accompanying electric slag welding, primary crystallisation in the weld pool, and the strength of electric slag welds. Welding procedures have been developed for high-alloy steels and alloys, titanium alloys, non-ferrous metals, and cast iron, and put to commercial use. Electric slag welding techniques have been perfected to include straight butt-weld seams in sections up to two metres thick and circumferential seams on vessels and shafts with a wall thickness of up to 400 mm.

In 1957 the electric slag process earned its inventors—people working at the Electric Welding Institute and in industry—a Lenin Prize.

In this book, the authors have sought to cover all the latest achievements in the science and art of electric slag welding.

The contributors are:

G. Z. Voloshkevich, M. Sc. (Tech.), Lenin Prize winner—Chapter I; Sections 1-6 of Chapter IV; and Section 3 of Chapter II with S. A. Ostrovskaya as co-author.

S. A. Ostrovskaya, M. Sc. (Tech.)—Sections 1, 2 and 4 of Chapter II; Section 9 of Chapter IV; and Sections 3 and 9 of Chapter VIII.

D. A. Dudko, M. Sc. (Tech.)—Chapter III.

I. K. Pokhodnya, M. Sc. (Tech.)—Section 7 of Chapter IV; and Section 8 of Chapter VIII.

Y. A. Sterenbogen, M. Sc. (Tech.)—Section 8 of Chapter IV; Section 7 of Chapter VIII; and Sections 1-4 of Chapter X.

I. N. Rublevsky, engineer—Section 10 of Chapter IV; and Sections 1 and 2 of Chapter VIII.

G. V. Zhemchuzhnikov, M. Sc (Tech.)—Sections 1, 2, 3 and 5 of Chapter V.

O. O. Rosenberg, engineer—Section 4 of Chapter V and Chapter IX with D. M. Rabkin, M. Sc. (Tech.) as co-author.

P. I. Sovbo, M. Sc. (Tech.)—Chapter VI

B. Y. Paton, D. Sc. (Tech.), Lenin Prize winner—Chapter VII.

I. V. Novikov, engineer—Section 4 of Chapter VIII.

B. I. Medovar, M. Sc. (Tech.)—Section 5 of Chapter VIII.

V. P. Didkovsky, engineer—Section 6 of Chapter VIII.

D. M. Rabkin, M. Sc. (Tech.)—Chapter IX (in co-authorship with O. O. Rosenberg).

G. S. Tyagun-Byelous, engineer—Section 5 of Chapter X.

Chapter I

ELECTRIC SLAG WELDING

1. Definitions

Electric slag welding is a process in which welding heat is produced by the passage of an electric current through a pool of molten flux, or slag. The process is shown schematically in Fig. 1. The pool of molten slag *3* is formed between the edges of the parts to be welded *1* and the travelling moulding shoes *2*. The metal welding rod or electrode *4* is dipped into the molten slag. Traversing the distance between the electrode and the parent metal, the current heats the molten slag, thus maintaining its elevated temperature and electric conductivity. The temperature of the slag pool should be above the melting point of both the parent and electrode metal. The slag melts the electrode and the edges. The molten parent metal and the electrode metal settle on the bottom of the slag pool to form a metal pool *5* which solidifies to give a weld *6*. The electrode is fed into the welding zone as it melts.

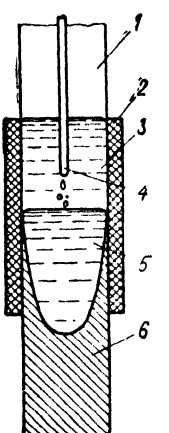

Fig 1. Diagram of electric slag welding.

The best conditions for the parent metal to melt and for a deep slag pool to be obtained exist when the joint runs vertically. For this reason, the weld pool has to be retained by moulding shoes. In the downhand position the electric slag process is less convenient and has not found any appreciable use.

The moulding of the weld consists in cooling the surface of the metal pool. Fig. 2 shows how the direction of heat abstraction affects the shape of the pool. Fig. 2*a* shows a hypothetical case with no heat transmitted through the unrestricted surface of the metal pool. In Fig. 2*b*, the metal pool is heated by molten slag, as in the submerged arc process. If the direction of heat abstraction is reversed, as in Fig. 2*c*, the pool will be dish-shaped. In this case the electric slag process can be applied to vertical joints. The heat is usually abstracted by copper travelling shoes or sta-

tionary back-up strips, which in turn are cooled by running water.

The main purpose of the slag in the electric slag process is to convert electric energy into heat. Accordingly, the principal properties of a slag are its electric conductivity and temperature coefficient of resistance.

Presuming we had a slag that would not change its conductivity with temperature, we would have no problems to tackle when employing it for welding purposes. After all, it is always possible to adjust the voltage impressed across a constant resistance so that the required amount of power is dissipated in the resistance and the desired temperature maintained. In practice, however, the conductivity of molten slag rises sharply with temperature, while below a certain point slag is non-conducting for all practical purposes. This complicates the stabilisation of welding.

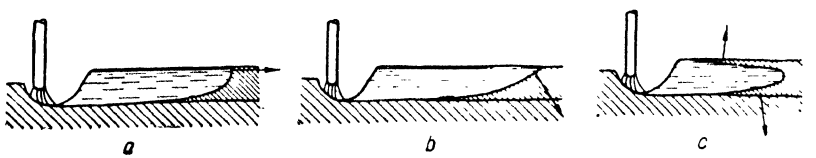

Fig. 2. Effect of heat abstraction on the shape of the weld pool

Some slags containing titanium dioxide are good conductors even when in a solid state at room temperature. Such slags show electron conductivity rather than the ion conductivity of molten slags.

As distinct from submerged arc welding, nearly all the electric power in the electric slag process is imparted to the slag pool which transfers it to the electrode and the parent metal. Therefore, if welding is to proceed steadily, the temperature of the slag pool must be constant, i. e., it must give as much heat as it receives.

Fig. 3 shows the heat input and heat abstraction plotted against the average temperature of the slag pool. At low temperatures, the curve of heat abstraction is always above the curve of heat input. The reason is that heat abstraction takes place at any temperature, provided it is above the ambient, while the slag begins to receive heat only at approximately 1,000° C.

The shape of the heat abstraction curve depends on the geometrical dimensions of the space in which welding takes place, notably on the surface area of the slag pool; rate of heat abstraction from the slag to the parent metal and to the moulding shoes; depth of the slag pool; melting of the parent metal; heat loss due to the evaporation of volatile components in the slag; amount of filler metal fed into the welding zone; and some other factors.

The factors affecting the shape of the heat input curve are the temperature coefficient of resistance of the slag; volt-ampere character-

istic of the power source; depth of immersion of the electrode in the slag; and depth of the slag pool. If the two curves do not intersect, the electric slag process is not applicable at all (curve *a*). If the curves intersect at one point (curve *b*), welding will not be steady; the temperature and power will decrease continuously to the left of the point of intersection (point *A*), meanwhile they will be constantly increasing to the right of the point. In case the two curves intersect at one more point (point *B* on the curve *c*), welding will be steady.

Let us see what happens when the conditions represented by the curves *b* and *c* are attainable. The curve *b* will take place when the power source has a straight-line volt-ampere characteristic and the electrode spacing varies little or slowly with the temperature of the slag pool. This may happen when the electrode has a large cross section, especially one comparable with the cross section of the resultant weld.

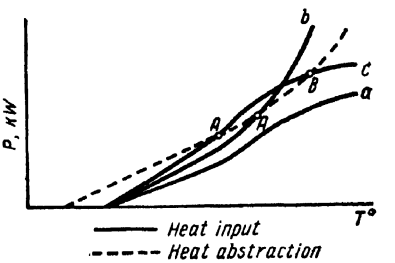

Fig. 3. Power vs. temperature.

If curve *c* is to be obtained, either the volt-ampere characteristic of the power source should be more drooping, or the conductivity temperature relation of the slag pool should be changed. As the temperature rises, the resistivity of the slag increases, but the depth to which the electrode must be immersed decreases. The net result will be an increase in the resistance of the slag pool. This factor becomes more pronounced with the decrease in the cross section of the consumable electrode. The reason is that with the same change in the amount of metal to be melted, the linear dimensions of an electrode change more when the cross section is small than when it is large. With slender electrodes, the temperature of the slag pool can simply be stabilised by changing the shape of the interelectrode space. Welding will be steady, even if the power source has a straight-line volt-ampere characteristic and the composition of the slag pool vary within broad limits.

The slags employed in the electric slag process should have a high boiling point and evolve no gas at elevated temperatures. Some slags boil quietly, without any violent evolution of gas. If not too strong, this gassing is a good temperature regulator for the slag pool, as it absorbs excess energy when the temperature rises.

The electric slag process may be impeded by the arc which may strike between the electrode and the open surface of the slag pool or, which occurs more often, between the electrode and the molten metal. The arc is unstable and may spoil the weld. To prevent this, the conditions of electric slag welding should be such as to suppress

the arc. In other words, the slag pool should be deep; the open-circuit a.c. voltage should be low; and the slags employed should have poor stabilising properties.

However, it is not advisable to go to extremes in preventing a steady arc. In some cases an inadvertent runout of the slag pool may upset the welding process. To re-establish the welding process, the arc should be sufficiently steady when the slag pool is shallow, but should grow unstable as soon as the slag pool becomes deep. This may be achieved by employing slender electrodes, thus increasing the gap between the edges, or by varying the open-circuit voltage of the welding transformer. It should be noted, however, that an increased gap is not attractive economically.

The transition from the initial arc to slag welding condition can be expedited by using calcium fluoride slags, as they have a high electric conductivity.

For the electrode metal to form a reliable union with the parent metal, the surface of the parent metal should be first raised close to the melting point; further, the surface of the metal should be protected from oxidation. In flat joints welded by the arc process the edges melt and the groove is filled with molten metal at different times. The metal from the cavity formed by the arc is thrown back. and the cavity is filled only after the arc is withdrawn. This is still more pronounced in vertical joints: the metal of the edges flashed by the arc or slag flows down to merge with the electrode metal. As a result, there will always be an unfilled cavity above the metal pool (Fig. 4).

If the edges of the parent metal are flashed much above the metal pool, the edges right above the pool may be cooled to below melting point. This may result in what is known as poor fusion, which should not be mistaken for poor heat penetration, when the edges are not melted at all. In poor fusion the edges are melted, but they do not fuse with the weld metal. (Fig. 5.)

Poor fusion is likely to occur when the welding voltage is too high, when the slag pool is too deep, or when the slags employed hardly change their electric conductivity and viscosity with temperature (so-called long slags). When the slag employed is chosen properly, as are the voltage and the other welding variables, poor fusion will not occur as a heat- and current-insulating layer of slag will wrap the cold edges of the work thus preventing their premature melting. This is because now the current will flow from the electrode to the metal pool in a kind of insulating tube, and the edges will be heated only at the very surface of the molten metal, even if the electrodes are spaced wide apart.

The greater proportion of the heat liberated in the slag is transferred to the metal pool by the electrode metal, and nearly all the thermal energy is transmitted to the parent metal through the surface of the molten metal.

If the welding voltage is too high, the excess heat in the slag pool will increase edge penetration. If increased penetration is not required, the heat may be utilised to melt the filler metal. The filler metal may be fed either as a wire, like an electrode, or in small pieces.

The heat balance of the electric slag process is discussed in Chapter II.

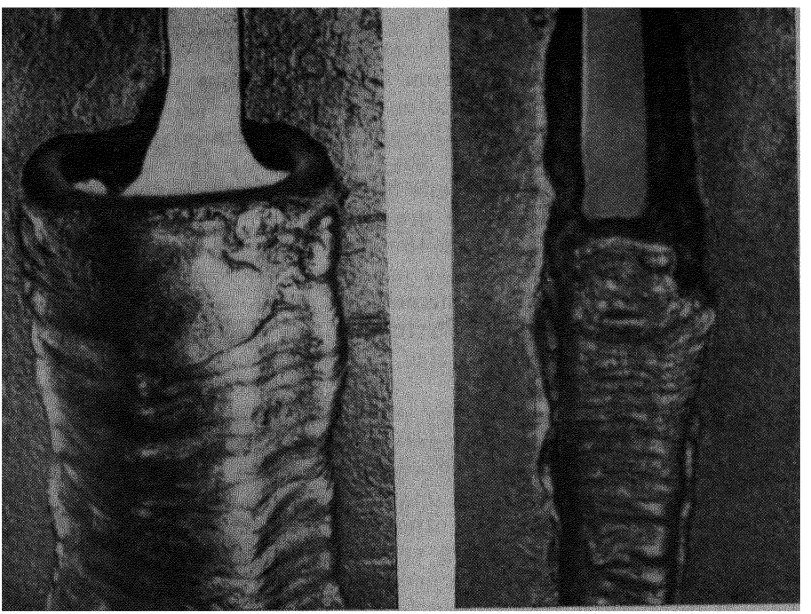

Fig. 4. Melted edges in electric slag welding.

Fig. 5. Poor fusion.

When slender electrodes are used, their spacing may also be reduced and poor fusion will be less likely to occur. The melting of the parent metal may be further improved by manipulating the electrodes in a weaving pattern in a horizontal plane and thus reducing, as it were, the interelectrode distance.

As has been shown by X-ray and oscillographic examinations of electric slag welds made under various conditions, the electrode metal is transferred to the metal pool in drops. The size of the drops varies inversely with the welding current, and directly with the voltage between the electrode and the metal pool, and the depth of the slag pool. Conversely, the size of drops decrease as the welding voltage is reduced, the slag pool grows shallow, and the welding current becomes heavy (for greater detail see Chapter III).

When the electrode is fed into the welding zone at a high rate, as is the case with low-carbon steels, or when the voltage is low, or the slag pool is shallow, the drops of metal may combine with the metal pool before they separate from the electrode. This union between the electrode and the metal pool will be broken up almost immediately by the electrodynamic forces present in the conductor, that increase with the current density. However, the current may flow through the metal for a large portion of the total weld time, as the circuit is completed at a high repetition rate. But this is no short-circuiting, as the overall conductivity of the welding zone at this moment increases only from 1.5 to 1.7 times. The power varies insignificantly or rises, depending on the power source employed.

The horizontal motion of the electrode in the slag has a similar effect on electric slag welding. On coming in contact with the cooler portion of the slag, the electrode has to go deeper before it can melt. Under certain conditions the drops of metal will touch the metal pool before they separate from the tip of the electrode.

The electric slag process may use either direct or alternating current. However, the type of current has an appreciable effect on the metallurgical phenomena occurring in the slag pool. Among other things, direct current gives rise to electrolysis (for greater detail see Chapter III).

As will be recalled, a steady arc in arc welding is only possible when the current density is relatively high. In manual arc welding the applicable current density varies within a narrow range, while in submerged arc welding it may vary from 20 to 200 a/sq mm. Electric slag welding, on the other hand, proceeds steadily with the current density varying over a very wide range from 0.2 or 0.3 a/sq mm (when electrodes of large cross section are employed) to 200 or 250 a/sq mm (when wire 3 mm in dia is used). In other words, the electric slag process is stable at current densities by a factor of 100 to 200 lower than in the case of arc welding.

2. Classification

Fig. 6 classifies applications of the electric slag process. They may be divided broadly into two basic systems: (1) applications with an unrestrained weld pool; (2) applications with a weld pool retained by moulding shoes. It is also possible to classify the electric slag process by current, power source characteristics, mechanisation, etc.

Moulded electric slag welding can be carried out in a variety of ways, depending on the type of electrode, the manner in which it is fed into the groove, and how the welding current is supplied. Commonly employed processes are welding with a wire, welding with large-size electrodes, welding with a consumable electrode guide, and electric slag butt-welding (which may more appropriately be called the resistance slag process).

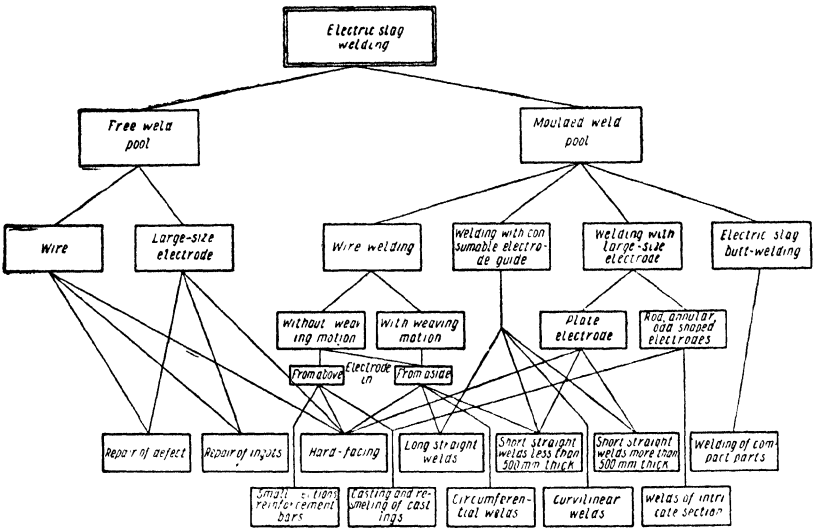

Fig. 6. Electric slag welding classification.

The electric slag process shown schematically in Fig. 1 is applicable to metal parts up to 50 or 60 mm thick. When the workpiece is very thick, the electrode should be moved to and fro across the thickness of the metal, or the number of electrodes should be increased,

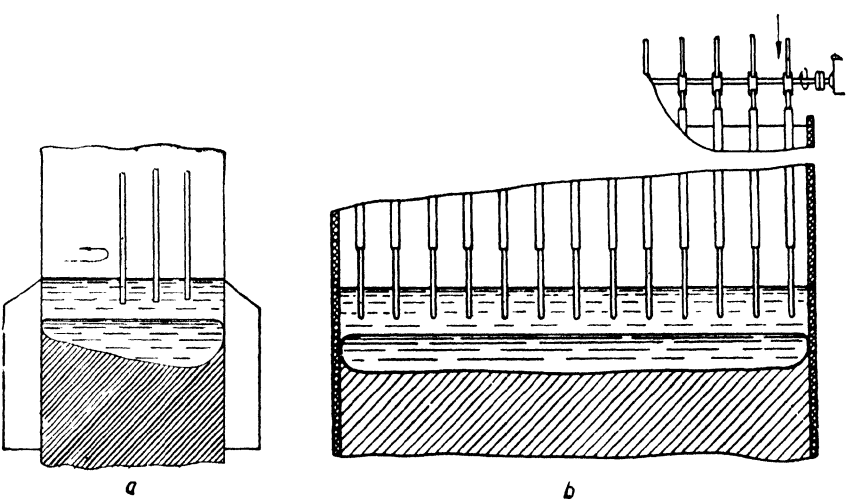

Fig. 7. Diagram of electric slag welding on heavy sections:
a—three electrodes weaving in the groove; *b*—multielectrode welding (without weaving motion).

or their cross section should be changed, or a combination of these three methods employed. Fig. 7*a* shows welding with three weaving electrodes, and Fig. 7*b*, with several fixed electrodes.

As a rule, not more than three weaving electrodes are employed, for otherwise welding equipment would be prohibitively complicated. When joints are relatively short (1 to 1.5 m), the electrode guides may be fed into the groove from above (as shown in Fig. 7*b*) rather than from the side. In such a case, there may be more than three electrodes. In both cases, the electrode guides and the wire-feed mechanism together should move up at the rate of weld formation.

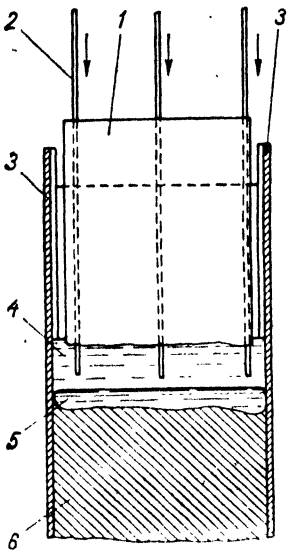

Fig. 8. Diagram of electric slag welding with consumable electrode guide: *1*—consumable electrode guide; *2*—electrode wire; *3*—moulding strips; *4*—slag pool; *5*—metal pool; *6*—weld.

Besides solid electrodes, use can be made of sintered wire or tubular electrodes, thus adding alloying elements to the weld metal.

When, as in Fig. 7*a*, the electrode guides are made of a material similar to that of the electrodes, and the wire-feed mechanism is not lifted during welding, the guides will be melted by the oncoming slag pool, and will go into the weld metal. This method is known as welding with consumable electrode guides (Fig. 8).

Fig. 9 shows, schematically, welding with three large-size plate electrodes. In this case, no electrode guides are employed, and the vertical motion mechanism carrying a fixed electrode moves down towards the joint.

Large-size electrodes may vary widely in shape, being rectangular (plates), annular (for cylindrical parts), or odd-shaped. For ingot repair, casting, resmelting and other jobs in which large amounts of metal have to be melted, electrodes may be of briquetted cuttings or other wastes. In some cases, when it is essential to control penetration, hollow electrodes filled with metal grit may be used.

Electric slag butt-welding, or the resistance slag process, differs in that it uses no filler metal, as the current is passed between the parts to be welded. It is shown schematically in Fig. 10. In a way, it resembles flash butt-welding. By this method, the parts to be welded are lined up horizontally, and the slag pool is formed between the top and bottom parts. When a current is passed through the slag, the surfaces to be joined are melted, and a pool of molten metal is formed above the bottom surface. Then the parts are forced together to expel the slag, the molten metal solidifies, and the joint is complet-

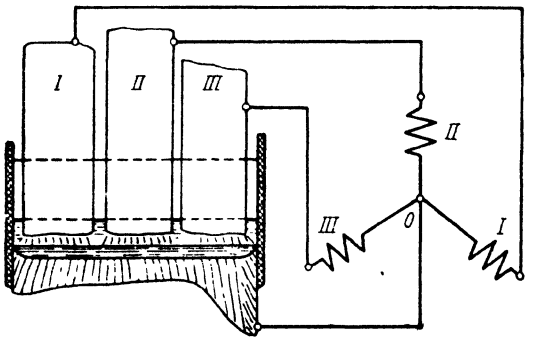

Fig. 9. Diagram of electric slag welding with three plate electrodes.

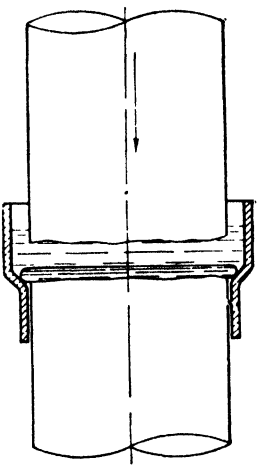

Fig. 10. Diagram of electric slag butt-welding (resistance slag welding).

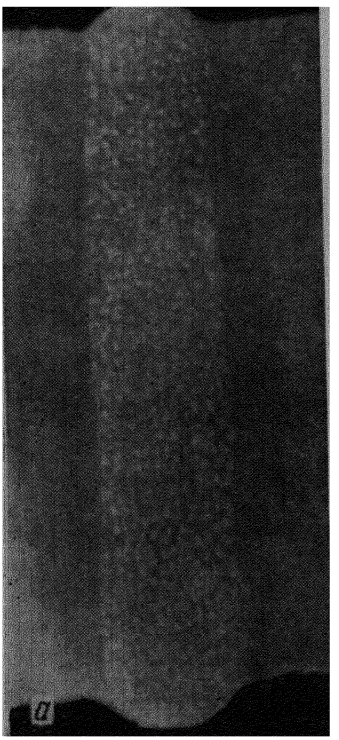

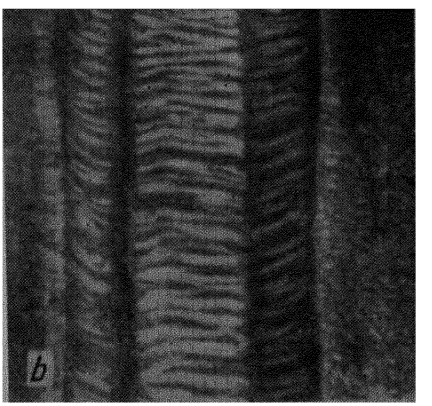

Fig. 11. Electric slag weld:
a—cross section, *b*—surface view.

ed. Sometimes, the current may be switched off before the parts are upset.

Wire welding has of late found a broad field of industrial application. Its advantage is that joints may be obtained of any shape

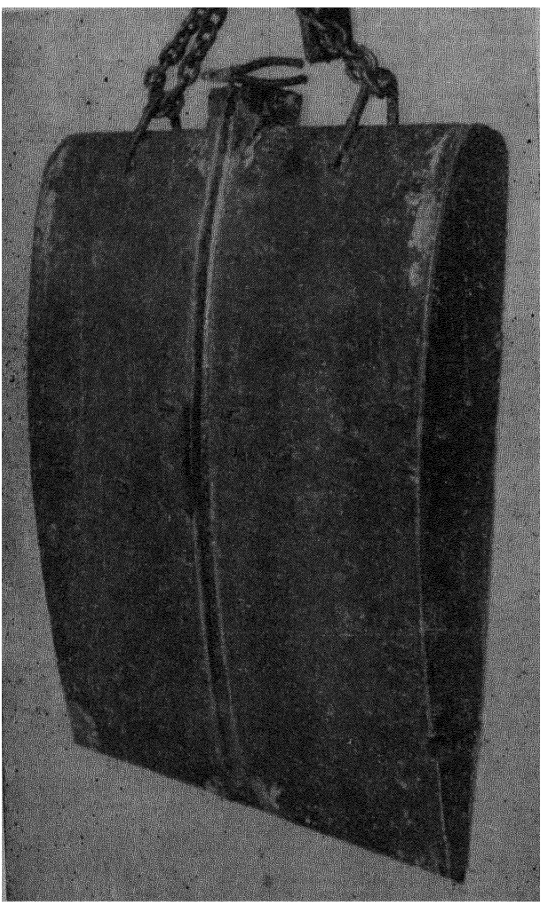

Fig. 12. Odd-shaped article welded by the electric slag process with a consumable electrode guide

and with uniform penetration across the desired width. The plate may be from 20 to 500 or 600 mm thick, and the joint of any length. Fig. 11 shows a joint obtained by the electric slag process, while Fig. 11*a* gives its macrograph.

Plate electrodes are applicable to relatively short (1-1.5 m) straight joints in metal of any thickness. In such cases, plate electrodes are

more convenient than weaving wire electrodes, as the requisite equipment is simpler and more reliable, and there is no need for room in front of the joint. A major advantage offered is that electrodes may be of cast iron or other metals which cannot be made into wire.

Welding with consumable electrode guides is applicable to any metal thicknesses and joints up to 3 m long. But, when necessary, it may also be applied to longer joints. As in the case of plate electrode welding, no room is required alongside the joint, while headroom above the joint may also be reduced. The technique is remarkable for its applicability to complex curvilinear joints. The only piece of equipment required is a portable wire-feed mechanism which, as a rule, is mounted right on the workpiece. This makes welding with consumable electrode guide very convenient where small joints are involved an also where other methods are unsuitable. Fig. 12 shows an odd-shaped weldment made by this technique.

3. Features

Moulded electric slag welding differs from both manual and automatic arc welding in a number of points which should be kept in mind and properly utilised.

When electric current passes in the slag, evolution of gas and slag sputtering are not so violent as in arc welding, and there is no slag sputtering at all when a steady state condition is achieved. Therefore, the surface of the slag pool may be left open. Flux is fed into the pool in small amounts so as to make up for the slag crust 1 or 1.5 mm thick lodging on the surface of the weld. This is approximately 0.2 to 0.3 kg of flux per running metre of weld, irrespective of metal thickness.

As the amount of flux to be melted is small, most of the electric energy consumed goes to melt the electrode and the parent metal.

The slag is mixed thoroughly in melting, and the edges of the work are melted farther away from the electrode than is possible in arc welding.

The practical advantages thus derived are small flux consumption averaging 5 per cent by weight of the deposit, including losses to spilling (which is one-twentieth of what is consumed in submerged arc welding), and low power consumption per kilogram of the deposit (a third to a half less than in submerged arc welding and a quarter of what is used in open-arc welding). Still more important in practice is the possibility of welding plate 150 to 200 mm thick per electrode in a single pass. When several electrodes are employed, there is no limit to metal thickness weldable by this method. This is why the electric slag process has been finding ever more applications in industry, especially in heavy engineering.

Mention should also be made of the following advantages of the electric slag process.

Little flux is consumed in electric slag welding, and only small amounts of fresh flux are added to the slag pool at a time. As a result, the chemical analysis of the weld metal remains more constant than in arc welding.

As slag-welded joints run vertically, it is much easier for gas bubbles to float up and slag particles to be removed from the metal. At the same time, grain-boundary voids fill better with metal. Should a gas bubble or non-metallic inclusion be entrapped on the boundary between the metal and the slag, they will travel with this boundary, meanwhile in arc-welded downhand joints they would be embedded in the solidifying metal. That is why cavities and other defects occur less often in electric slag welds than in arc-welded downhand joints. Besides, the moisture content of the slag, and rust and dirt on the edges of the work have a lesser effect on the weld.

Vertical electric slag welds are favourable for grain growth. Therefore, they are free from what is known as the weakness zone which is usually observed in heavy-gauge joints made in the downhand position. For the same reason, an electric slag weld is less susceptible to hot cracks. The temperature conditions in the weld-affected area are also favourable due to a larger heat input per unit length of weld, compared with individual layers in multipass welding, and to the preheating action of the slag pool. The heating of the edges begins when they are level with the surface of the slag pool, while their melting starts in close proximity to the molten metal. Preheating and melting are thus spaced 2 to 3 minutes apart or more. As a result, the rate of heating and of subsequent cooling is slowed down.

In electric slag welding, joints are completed in a single pass. Therefore, the linear speed of welding in heavy sections has to be much lower than in multipass arc welding. Hence, the rate of heating and subsequent cooling in the weld-affected area is very low, and self-hardening steels show a negligible tendency to cracking in that area during welding (for greater detail see Chapter VIII).

For the same reason, slag-welded joints are free from microscopic inclusions—a very common defect in multipass arc welding. The inclusions may only appear in the case of a wide departure from the prescribed welding procedure.

No bevelling of edges is required for electric slag welding, no matter how thick the work may be. Instead, the parts to be welded are fitted up so that a gap is left between them. This saves much in both labour and money.

The groove thus obtained is of symmetrical shape and the electrode in it is equi-distant from the edges. Therefore, as a rule, no angular distortion takes place, though it may occur in some special joints.

When the work is less than 40 or 50 mm thick, electric slag welding takes more labour and money than submerged arc welding.

However, the production rate and economics of the electric slag process improve rapidly with increasing metal thickness and are many times greater than in arc welding for thickness over 100 mm.

4. Applications

Originally, electric slag welding was applied to vertical joints in field work, where they could not be welded in the downhand position convenient for the arc process.

Its high efficiency soon made the electric slag process a basic method for welding heavy sections, and it found many uses outside the welding field proper. Electric slag welding is now employed to make welds in both production and repair work, for the building-up of worn surfaces, the repair of ingots and castings, and for special purpose casting.

The electric slag process has completely ousted multipass arc welding in the fabrication of boilers and other high-pressure vessels. It is useful in the production of frames for heavy mechanical presses; frames, crossheads, heads and cylinders for hydraulic presses; shafts for large hydraulic turbines and turbo-alternators; rolling mill frames, ship hulls, stern frames and stems; frames for large electric machines, locomotive frames, buckstays for open-hearth furnaces, crankshafts, large flanges and many other weldments. Currently, work is under way to adapt the electric slag process to the fabrication of runners for hydraulic turbines, parts for turbo-alternators, etc. Wide use is made of electric slag welding in joining reinforcing rods and bars for ferro-concrete structures (by the so-called slag-bath method). Though electric slag welds are relatively small in cross section, this method has proved far more efficient than any other method.

In some cases welded structures mean a saving of metal. By way of example, the welded shafts for the Varvarino Hydropower Station were made from ingots weighing 59 tons, instead of 100 tons for all-forged shafts. The welded frame of a 4,000 ton forging press is 24 tons lighter than a cast one. The same applies to the buckstays for the open-hearth furnaces made at the Dnepropetrovsk Works, where much heavy-gauge rolled metal was saved through a cut-down in wastes.

However, the advantages of electric slag welding are not only of a purely economical order. Its use has radically changed the trend of development in heavy engineering. In recent years, the requirements of various industries have been running ahead of what heavy engineering was able to offer in terms of size and weight of large machines and structures. In most cases, the size of machine elements is limited by the maximum weight of molten metal that can be cast a time. This weight may be much larger than that of the finished

product due to the waste of metal in risers and gates and in machining. In turn, the maximum weight of a casting is limited by the lifting capacity of the cranes available, the capacity of melting furnaces, and by the fact that the quality of metal is impaired as the size of a casting increases.

Other limiting factors may be the capacity of forging equipment, the size of soaking pits and heat-treatment furnaces, and the size of metal-working machines. Special mention should be made of the limitations imposed by the difficulties of carrying bulky parts to erection sites.

The size and weight of machine elements could be increased, if the above listed production capacities were expanded in proportion. Electric slag welding, however, offers an entirely different approach.

For one thing, there is no need for bigger cranes, moulds, or presses, as structures can be designed in several sections rather than in one casting or forging, and can then be assembled by electric slag welding into a composite unit.

Heat-treatment furnaces seem a more difficult bottleneck to clear, especially when parts have to be machined to close tolerances. When heat treatment is employed only to improve the quality of a weld, it may be replaced with local heat treatment or entirely dispensed with. Currently, local heat treatment is applicable only to simple shapes. In the near future, however, its field of application will undoubtedly widen to include intricate designs.

When it is essential to preserve the initial shape and size of the work, local heat treatment will not do, as it cannot relieve all welding stresses. Instead, the design of the work has to be changed.

For some time past, an ever wider use has been made of machine moulding. Unfortunately, the moulding machines available can only handle relatively small parts. However, their usefulness can be enhanced by what may be called the cast-and-weld technique. This technique is attractive even if manual welding is employed. Electric slag welding will certainly widen the range of cast-welded structures, and manual moulding will be on its way out.

Until quite recently, electric slag welding was employed in heavy engineering sporadically. In effect, the products made with it could have well been made without it.

The picture will change when large products are designed with an eye to the electric slag process. Even with existing equipment, electric slag welding will enable structures to be made that are now out of reach for large factories. A proportion of orders will be shifted from large to small manufacturers, and time requirements will be cut appreciably.

Electric slag welding has already made it possible to manufacture blanks of any size on low-power machine-tools and forging presses. But further increase in the size of jobs is limited by transportation facilities. One way out is to adapt electric slag welding to field work.

In some cases, the quality of slag-welded joints made right on the site will be determined by the reliability of local heat treatment.

The electric slag process holds out special promise as a hard-facing technique. Using large-section electrodes, it may be employed for the fabrication of composite and compound metal products, for the lining of thick-walled vessels, etc. In most applications, when the surfaces are vertical or inclined, the process can be carried on as in welding proper. On horizontal surfaces travelling moulding shoes can be dispensed with, and slender wire electrodes used, as they do not require a deep slag pool.

Electric slag welding is applicable to a wide range of steels, including low- and medium-carbon steels, ferritic stainless steels, austenitic chrome-nickel steels, refractory nickel-base steels, etc. More recently, great headway has been made in the slag-welding of cast iron, titanium and titanium alloys, and also of some steels of increased hardness, which tend to self-harden in the air.

Besides long straight and circumferential joints, short joints in thick plate can be slag-welded.

As has been noted, electric slag welding is best applicable to metal thicknesses upward of 40 or 50 mm. However, it can be employed to advantage on lighter sections, if it is essential to avoid angular distortion or the steel is hard to weld by any other process; should a perfect surface finish be needed on both sides of the joint; or where it is hard to move the work into a more convenient position. For example, one boiler-making factory in the Soviet Union prefers to weld boiler barrels 20 mm thick by the electric slag process so as to avoid root-weld removal and repositioning.

In the case of vertical erection joints, electric slag welding is preferable to manual welding already on sections as light as 16 or 20 mm.

Whether to give preference to electric slag welding or not, depends largely on the number of joints that need to be made. The limiting thickness will be the less, the larger the number of joints.

Chapter II

WELD FORMATION IN ELECTRIC SLAG WELDING

1. Heat Input and Distribution

In electric slag welding the heat input Q in the slag pool can be determined by the equation

$$Q=0.24\ VI \text{ cal/sec},$$

where V—welding voltage, in volts;
I—current, in amperes.

The heat generated in the slag pool is the main source of the total heat input in electric slag welding. Other sources of heat, such as chemical reactions between the metal and slag, are insignificant and may be ignored.

Most of the electric power is converted into heat by the superheated slag adjoining the electrode tip rather than by the slag pool as a whole (Fig. 13). The point is that, according to B. Paton, the greater proportion of current flows through the electrode tip.

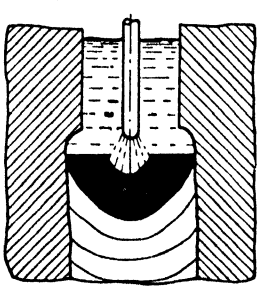

Fig. 13. Slag pool as source of welding heat in electric slag process.

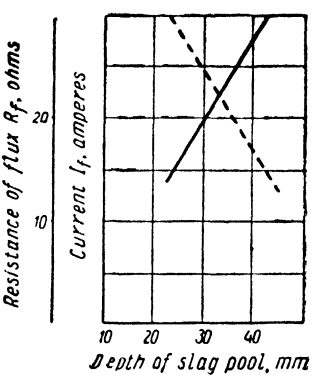

Fig. 14. Electrical conductivity of molten slag and current flowing through the side surface of an electrode plotted as a function of the depth of the slag pool.

Fig. 14 relates the conductivity of the slag and the current flowing through the side surface of the electrode to the depth of the slag pool. The resistance of the slag decreases as the slag pool becomes deeper. The share of the current flowing through the side surface of the electrode remains insignificant, however.

The position of the electrode tip in the slag pool determines the location of the heat centre, but depends, in turn, on the welding conditions (Fig. 15). As the welding current increases, the electrode

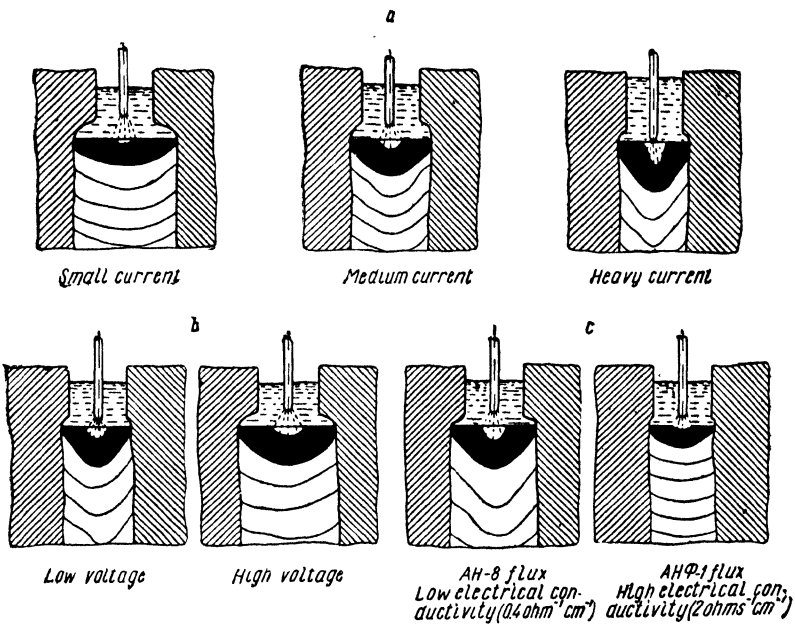

Fig. 15. Position of the electrode tip in the slag pool and the shape of the weld pool as a function of welding current (at *a*), welding voltage (at *b*) and electrical conductivity of flux (at *c*).

tip has to go deeper into the slag pool. If the current is heavy enough, the electrode tip may even be dipped into the molten metal for a short time. Conversely, the electrode tip may be immersed in the slag pool not so deeply, if the welding voltage grows high.

The other welding conditions, as well as the properties of slags (above all their electrical conductivity), also bear upon the position of the electrode tip in the slag pool. Fig. 80 presents the electrical conductivity of the fluxes employed in electric slag welding. The stability of electric slag welding improves as the electrical conductivity of the slag increases, but to a certain point only. If the flux offers too low a resistance to current, the amount of energy dis-

sipated in the slag pool may be insufficient to sustain the welding process.

The total heat input is spent to melt the electrode, the parent metal and the flux, is abstracted from the slag pool by the moulding shoes, and is lost through radiation from the surface of the slag pool, and through conduction to the body of the parent metal.

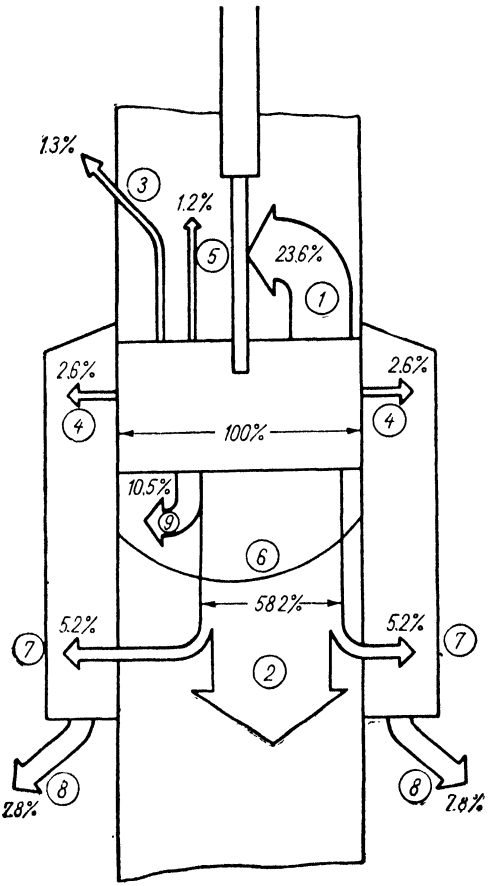

Fig. 16. Heat balance of electric slag welding (steel 90 mm thick):

1—heat consumed to melt electrode; *2*—heat abstraction by parent metal; *3*—heat radiated by slag pool to edges; *4*—heat lost by slag pool to moulding shoes; *5*—radiation losses; *6*—heat consumed to melt parent metal; *7*—heat lost to moulding shoes by metal pool; *8*—total heat lost by edges to moulding shoes; 9—heat consumed to superheat metal pool.

The pattern of heat distribution in electric slag welding varies with welding conditions. The chart in Fig. 16 gives some idea of the heat balance for medium welding current and voltage and a plate 90 mm thick. As will be seen from Fig. 16, most of the heat is abstracted by the body of the parent metal. The increased heat abstraction, as compared with submerged arc welding, is due to the diminished concentration of heat in this case. Nevertheless, electric slag welding consumes less electric energy per running metre of joint than submerged arc welding. The reason is that less metal has to be added to the weld, as the edges of the parts to be welded are not bevelled, but are fitted up for welding with a gap. It should also be kept in mind that the heat abstracted by the bulk of the metal is not at all wasted, as it performs a kind of preheating.

The electrode wire in electric slag welding is preheated both by the current flowing in it (as in arc welding) and by the slag pool (Fig. 17). The end of the electrode dipped into the slag pool is heated most. Usually, electrodes in electric slag welding are dipped 65 to

75 mm into the slag pool, and the current density is anywhere from 50 to 100 a/sq mm. Therefore, the melting rate is 18 to 22 g/a-hr, instead of 12 to 15 g/a-hr in submerged arc welding.

Fig. 18 shows the melting rate for electrode wire 3 mm dia plotted against the welding current in both electric slag and submerged arc

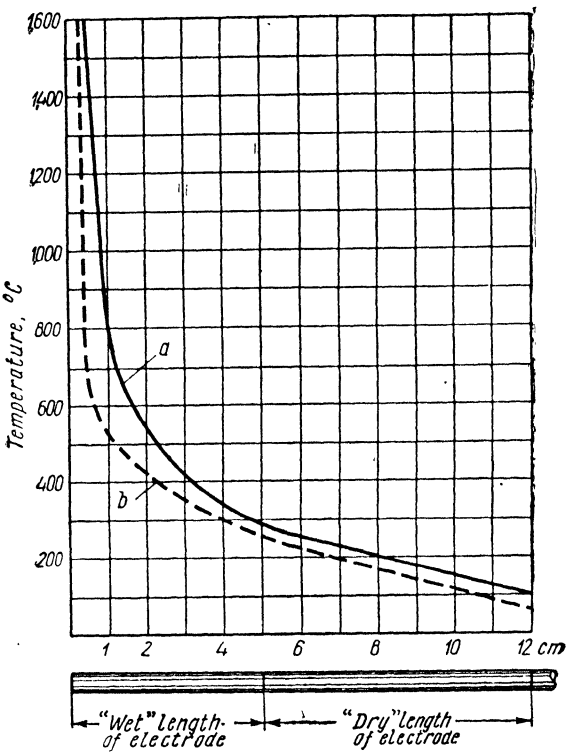

Fig. 17. Heating of dry length of electrode in arc and slag welding:
a—slag welding; *b*—arc welding.

welding. As can be seen, the power spent to melt the electrode wire was utilised more efficiently in electric slag welding. The flux was Grade AH-8, and the electrode wire, Grade Cb-10Г2, 3 mm dia. The welding voltage was 44 to 48 v, and the electrode was immersed 70 mm into the slag pool. Submerged arc welding used Grade AH-348-A flux and Grade Cb-10Г2 wire 3 mm dia. The arc voltage was 34 to 38 v, and the electrode was dipped to a depth of 25 to 30 mm.

The curves in Fig. 18 may serve as a rough guide to the relation between the welding current and the rate of electrode feed. This relation may vary widely, depending on the length of electrode

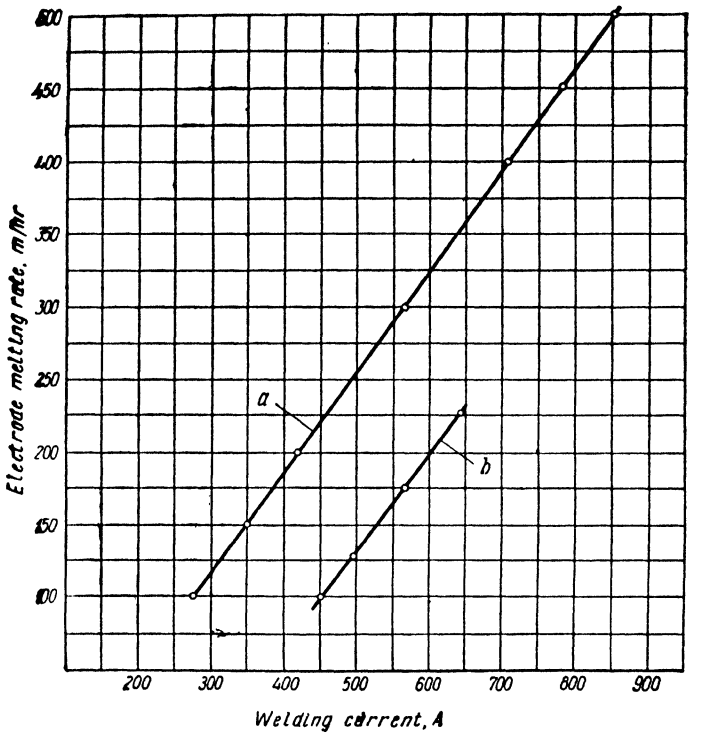

Fig. 18. Speed of wire feed plotted against welding current in submerged arc and electric slag welding:
a—electric slag welding; b—submerged arc welding.

outside the slag pool, the electrode diameter, the contact between the electrode guide and electrode, and the chemical analysis of electrode wire.

2. Propagation of Heat in the Parent Metal

The thermal cycle of the metal in the weld-affected region in electric slag welding determines to a great extent the structure of the metal and the quality of the resultant weld. The heat from the molten slag and metal is dissipated rather quickly because of intensive convection. As a result, the heat source is spread all over the interface between the liquid and the solid phases.

As has already been mentioned, the heat that melts the edges of the work comes from two sources: the molten slag and the molten metal. In the first case, the heat is applied to the edges throughout the depth of the slag pool and across the thickness of the work. In

the second case, the heat is effective throughout the depth and width of the metal pool. The amount of heat supplied by the molten metal can be found from the melting rate and the heat capacity of the metal

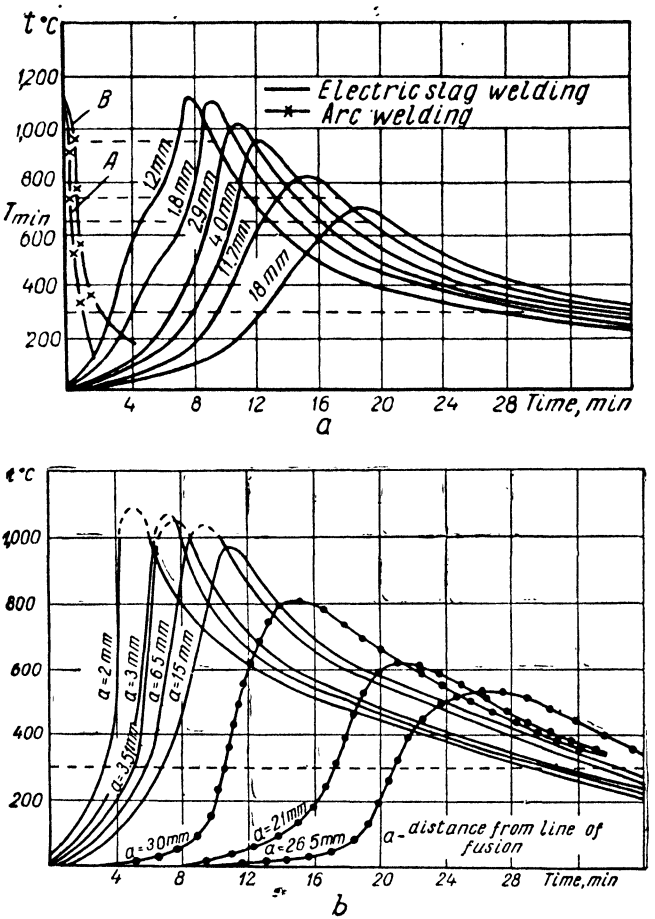

Fig. 19. Thermal cycle:

a—electric arc and electric slag welding of steel 100 mm thick with one electrode; b—electric slag welding of steel 100 mm thick with two electrodes (solid lines) and electric slag welding of the same steel with plate electrode (dotted lines).

at the temperature of molten slag. The amount of heat available from the slag pool is the difference between the effective heat input and the heat of the molten metal.

Only initial attempts have been made to date to establish analytic relations between heat generation and the temperature field in elec-

tric slag welding. The equations derived are too complicated for practical use and have not been checked over a sufficiently wide range of welding conditions. Therefore, our knowledge about the thermal cycle in the weld-affected region depends mainly on direct measurements. The thermal cycle in the weld-affected region varies with welding conditions and procedures. Table 1 and Figs. 19 *a*, *b* illustrate the thermal cycle in the middle of the joint welded with one or two electrodes 3 mm in dia and a plate electrode. For the sake of comparison, Fig. 19*a* shows the thermal cycle of multipass submerged arc welding, in which the workpiece was allowed to cool to room temperature after each pass. The thermal cycle was determined to include the last layer.

Tables 1 and 2 give some basic data on the thermal cycle in the weld-affected region heated to over 1,000° C. As will be seen from Figs. 19*a* and *b*, and Table 2, electric slag welding shows a lower heating rate, a longer time at over 1,000°C (i.e., overheating), and a slow cooling rate. Because of all these factors, the weld-affected region is wider in electric slag welding than in arc welding.

Table 1

Welding conditions	Electric slag welding			Multipass submerged arc welding	
	1 electrode, 3 mm	2 electrodes, 3 mm	plate electrode 12×110 mm	Mode 1	Mode 2
Metal thickness, mm	100	100	110	100	100
Current in each electrode, a	450	450	950	500	500
Welding voltage, v	38-40 d. c.	44-46 a. c.	30-32 a. c.	32-34	32-34
Rate of weaving motion, m/hr	40	40	—	—	—
Welding speed, m/hr	0.7	1	0.8	40	40
Electrode length above slag pool (dry length), mm	50	70	—	40	40
Depth of slag pool, mm	40	55	25-30	—	—

The thermal cycle of the weld-affected region is practically the same in all the welding conditions mentioned above. The two-electrode technique differs from the single-electrode method in that the parent metal in the weld-affected region is raised to the maximum temperature more quickly, while the metal remains in the superheated state for the same length of time, and the rate of cooling in the pearlitic and martensitic field is slower.

In welding with a plate electrode, the metal is raised to the maximum temperature more quickly than with two electrodes, and is cooled much more slowly.

From the foregoing it follows that in electric slag welding the heat in the parent metal is less concentrated. As a result, the metal in the weld-affected region is raised in temperature and cooled more slowly than in arc welding. This is why cracks in the weld-affected region occur less often when self-hardening steels are welded by the electric slag process. The explanation is that the predominant microstructure in this region is troostite plus pearlite, resistant to quench-cracks. The brittle and stressed martensitic structure which accounts for cracks in the weld-affected region does not appear at all or is insignificant and less stressed. On the other hand, in welding structural carbon steels superheating and grain growth in the weld-affected region may have either to be limited or prevented entirely.

Table 2

Thermal cycle variables	Electric slag welding		Multipass submerged arc welding	
	1 electrode, 3 mm	2 electrodes, 3 mm	Mode 1	Mode 2
Heating time to max. temperature, sec.	640	470	3	5
Time at over 1,000°C causing overheat, sec. . . .	95	100	2.5	7
Cooling time from 700 to 350°C (range of pearlitic-troostitic structures), sec.	630	1,020	12	55
Cooling time from 350 to 200°C (upper interval of martensitic field), sec.	1,620	2,460	20	225
Width of weld-affected region, mm	16	18	2	5

3. Welding Procedures and Their Effect on Weld Shape and Dimensions

By a welding procedure is meant the set of variables determining the course and results of the welding process. The variables themselves will be referred to as welding conditions.

In electric slag welding, the conditions are: speed of electrode feed v_e; current I; voltage between the electrode and the work, or simply welding voltage v_w; depth of the slag pool $h_{s.p}$; electrode length above the slag pool, or dry length l_{dr}; rate of weaving motion of the electrode v_{weav}; cross section of the electrode F_e; number of electrodes n; gap between the edges b_g; and some other variables.

The primary variables or conditions of a welding procedure are: speed of electrode feed; depth of the slag pool; dry length of the electrode (or the distance from the lower contact point of the electrode guide to the surface of the slag pool); rate of weaving motion; cross section of the electrode; and number of electrodes. These variables are independent of a given welding procedure and are determined solely by the setting of the welding machine and the shape of the work.

The width of the groove may also be regarded as an independent variable. (In actual welding, as will be seen elsewhere, the width of the groove may vary to suit the adopted welding procedure.)

The secondary or dependent variables of welding conditions are, primarily, the welding speed and the welding current which are determined mainly by the speed of electrode feed and, to a degree, by the conductivity of the slag pool.

Normally, alternating current and welding transformers with a straight-line volt-ampere characteristic are used in electric slag

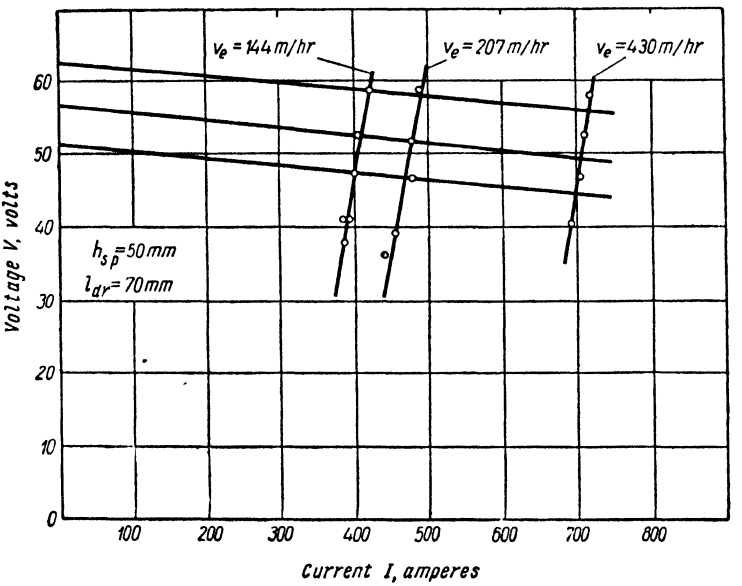

Fig. 20. Welding current vs. welding voltage in electric slag welding with a constant-voltage transformer.

welding. In this case, the welding voltage depends but little on welding current. If the welding transformer has a drooping characteristic, the welding voltage is a dependent variable of the welding procedure, varying with the welding current.

Fig. 20 shows the characteristics of the ТШС-1000 welding transformer. Each curve corresponds to a certain magnitude of open-circuit voltage. The chart also shows welding voltage plotted against welding current for three electrode speeds. The welding voltage varies by approximately the same amount as the open-circuit voltage of the transformer, while the current changes to a very small degree.

In free welding, the welding speed is an independent variable of a welding procedure. Welding speed v_w, electrode speed v_e, cross

section of the weld metal F_w and cross section of the electrode F_e are related by the equation:

$$\frac{v_w}{v_e} = \frac{F_e}{F_w}.$$

This equation is valid for any welding technique. In free welding, however, the welding speed, electrode speed and electrode cross section are independent variables. The cross section of the weld reinforcement may vary; it absorbs inaccuracies in the other variables and in groove cross section.

In welding with travelling moulding shoes, the cross section of the weld metal is determined by the thickness of the work and the gap between the edges; it is independent of the amount of metal fed into the welding zone. In the existing electric slag welding systems, it is conventional to cover all inaccuracies in the gap and other variables by the welding speed. Therefore, it is a secondary or dependent variable of a welding procedure and can be found by the following equation:

$$v_w = v_e \frac{F_e}{F_w}.$$

By the welding speed in this particular case is meant the rate at which the weld is formed or, in other words, the rate of motion of the metal pool. The welding machine must travel on the average with a speed comparable to this rate. When the machine moves at a slower rate than that at which the weld is formed, the dry length of the electrode decreases, the slag pool flows over the edge of the moulding shoe (should it be employed), and the welding process becomes unstable. When conversely, the machine travels more quickly, the process will first be upset and then the slag pool may run out from beneath the moulding shoe. This is discussed in greater detail elsewhere in this book.

Of the other dependent variables of a welding procedure the most significant one is the difference between electrode spacing and the swing of the electrodes. In practice, the quantity Δ_1 is often called "lack of coverage". It is independent of metal thickness. For a more detailed discussion the reader is referred to page 46.

Basic to a weld in electric slag welding is its width b (Fig. 21). As applied to electric slag welding the term "depth of fusion" is misleading, as welds usually run vertically. Instead, it is more appropriate to speak of the width of fusion and the depth of the metal pool.

Another important variable determining to a great extent the resistance of a weld to crystallisation cracks is the aspect ratio, ψ, or the ratio of weld width b to the depth of the metal pool H (Fig. 22). This is why a good deal of attention will be devoted to the effect the individual variables of a welding procedure have on the width of the weld and the depth of the metal pool.

The aspect ratio may be anywhere from 0.8 to 10, the average value being 1.5 to 4.

It should be borne in mind that the width of fusion and the depth of the metal pool may vary across the thickness of the work. However, these variations can be minimised by choosing the proper welding procedure. Supplementary to the shape of a weld is the height of reinforcement which is determined by the depth of the grooves in the moulding shoes or back-up strips. As a rule, the reinforcement is of the order of 2 to 4 mm in welding with wire, and of 8 to 10 mm in welding with plate electrodes.

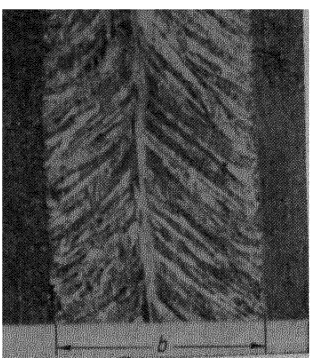

Fig. 21. Weld width in electric slag welding.

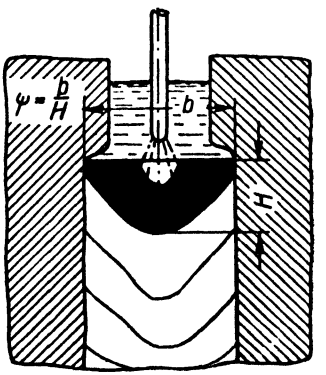

Fig. 22. Shape of the metal pool in electric slag welding.

Electrode speed and other variables indirectly bear on the width of fusion, and the depth of the metal pool, as they change the welding current and voltage, or power, and the rate of travel of the heat source, or the distribution of heat in the slag pool and the parent metal. Therefore, it would be more appropriate to examine the effect of the welding variables on these factors and then to trace the effect of the latter on the width of the weld, the depth of the metal pool, and the composition and properties of the weld. This would make it possible to trace the general mechanism of weld formation and to calculate the shape and composition of the weld with an accuracy sufficient for practical purposes. Our knowledge of the relevant factors, however, is yet scanty, and we have to limit ourselves to evaluating the immediate effect of a welding procedure on penetration, i. e., on the width of the weld and the depth of the metal pool.

The effect of current on the weld has been studied, as well as the effect of voltage, but for practical purposes it is more convenient to approach the shape of a weld as a function of electrode speed rather than of current, since electrode speed can be controlled more accurately than current.

Fig. 23 relates welding current and the width of the weld to electrode speed at constant welding voltage. Referring to the curves, current varies almost linearly with electrode speed, but lags behind it appreciably.

The relation between welding current and electrode cross section is about the same. If, however, electrode speed were varied inversely as the cross section so that welding speed remained constant,

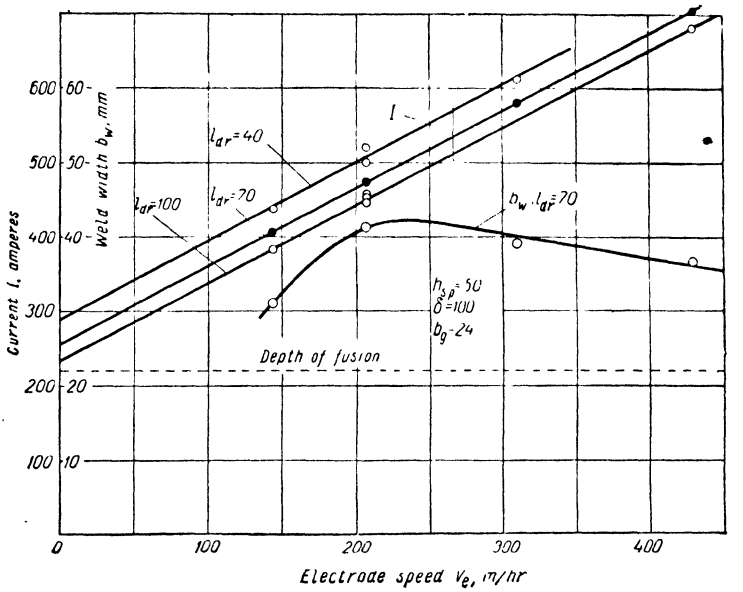

Fig. 23. Welding current and weld width plotted against speed of wire feed, with variations in welding voltage compensated by varying no-load voltage of transformer.

current would grow somewhat with the increase in the cross section of the electrode

The changes brought about in the width of the weld by variations in electrode speed are illustrated in Figs. 24 and 25. In the case of heavy currents, penetration decreases as electrode speed increases. The reason is that there is no proportionality between welding current and electrode speed, and energy per unit length decreases with the increase in electrode speed. Were current to change in proportion to electrode speed, the energy per unit length ($g_{u.l}$) would not change at all. However, current increases more slowly than electrode speed, and the energy per unit length decreases as the current increases.

For example, when an electrode 3 mm in diameter is fed at 200 m/hr, the current (according to Fig. 23) will be 460 a, and the energy

per unit length at 50 v and a groove of 24 sq mm in cross section will be

$$g_{u.l} = \frac{P}{v_w} = \frac{VIF_g}{v_e F_\nu} = \frac{50 \times 460 \times 24}{200 \times 0.07 \times 1{,}000} = 39.5 \text{ kwh/m.}$$

When electrode speed is increased to 400 m/hr, the current will only go up to 680 a. Then,

$$g_{u.l} = \frac{50 \times 680 \times 24}{400 \times 0.07 \times 1{,}000} = 29.1 \text{ kwh/m,}$$

or nearly 30 per cent less.

Conversely, at low electrode speeds, the width of the weld decreases with the decrease in the current. The reason is that at low weld-

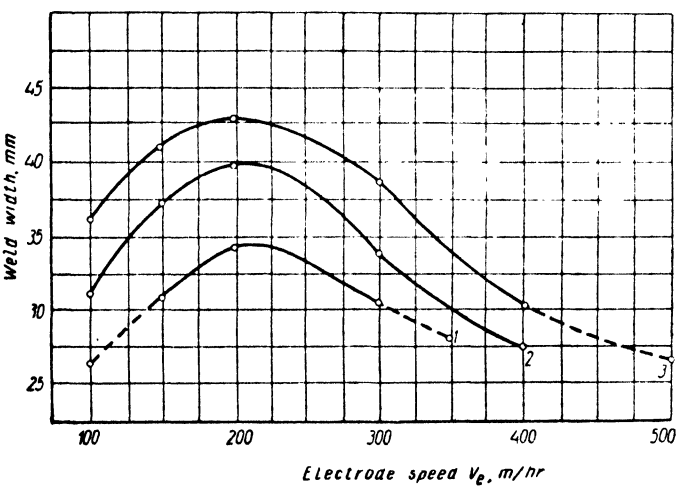

Fig. 24. Weld width vs. speed of wire feed on various thicknesses of metal per electrode $\frac{\delta}{n}$:

1 — $\frac{\delta}{n}$ = 150 mm; *2* — $\frac{\delta}{n}$ = 100 mm; *3* — $\frac{\delta}{n}$ = 50 mm (electrode 3 mm in diameter)

ing speeds, the width of isotherms in the temperature field decreases as the power and the speed of travel of the heat source decrease.

Even when the diameter of the electrode remains unchanged, its speed may vary within broad limits. For a wire 3 mm in diameter, electrode speed may be anywhere from 60 to 500 m/hr. The lower limit of electrode speed is in most cases governed by considerations of production rate and, sometimes, by the fact that penetration will decrease. The upper speed is limited by the danger of crystallisation cracks developing in the work. The effect of electrode speed on the depth of the metal pool is illustrated in Figs. 26 and 27.

The speed of weaving motion of the electrode V_{weav} has practically no effect on the depth of the metal pool, but affects considerably the thickness of metal which will not be remelted in the subsequent pass of the electrode.

Changes in the welding voltage affect the size and shape of the weld because they entail changes in the power of the welding transformer, provided the welding speed remains constant.

Changes in the width of the weld bring about changes in the amount of electrode and parent metal that goes into the weld metal, which fact affects the chemical composition of the weld metal. The proportion of the parent metal in the weld metal γ is

$$\gamma = \frac{b_w - b_g}{b_w} \times 100\ \%,$$

where b_w is the width of the weld in mm, determined as an arithmetical mean of the width measured at the ends and in the middle of the weld; and b_g is the joint gap in mm.

Fig. 28 relates the width of the weld and the welding voltage which is controlled by varying the open-circuit voltage of the welding transformer. Referring to Fig. 28, it will be seen that the increase in the width of the weld is greatest at medium voltages, and it is more moderate as the welding voltage is further increased.

If the welding voltage is decreased past a certain point, poor fusion may result and the stability of the welding process may be upset, as the electrode tip will close with the metal pool, and as a result the molten metal will sputter. Welding voltage may likewise be raised only to a certain point past which the welding process grows unstable, and there is sputtering from the surface of the pool. At very high voltages, an arc may strike between

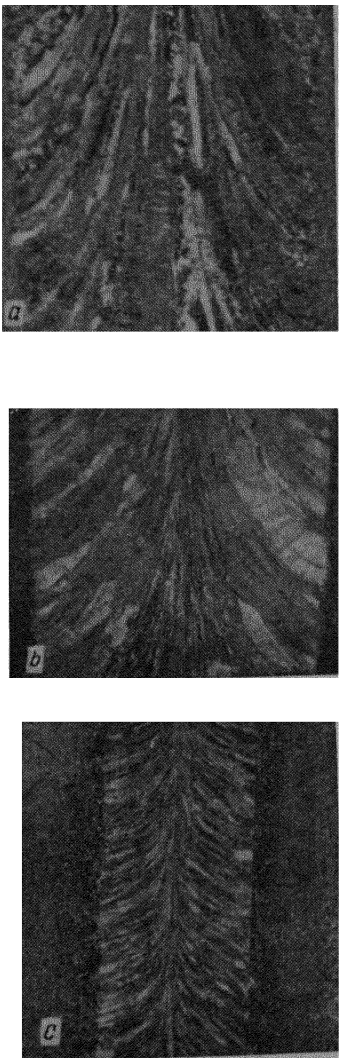

Fig. 25. **Longitudinal sections of welds made at various speeds of wire feed:**

a—broad weld, welding speed of 100 m/hr; *b*—broader weld, welding speed of 200 m/hr, *c*—narrow weld, welding speed of 500 m/hr (the other welding variables being the same in the three cases, and electrodes 3 mm in dia).

the electrodes and the surface of the slag pool, and poor fusion may result.

Fig. 29 relates the width of the weld and welding voltage at various electrode speeds (from 200 to 500 m/hr) and various thicknesses of metal per electrode $\left(\frac{\delta}{n}\right)$.

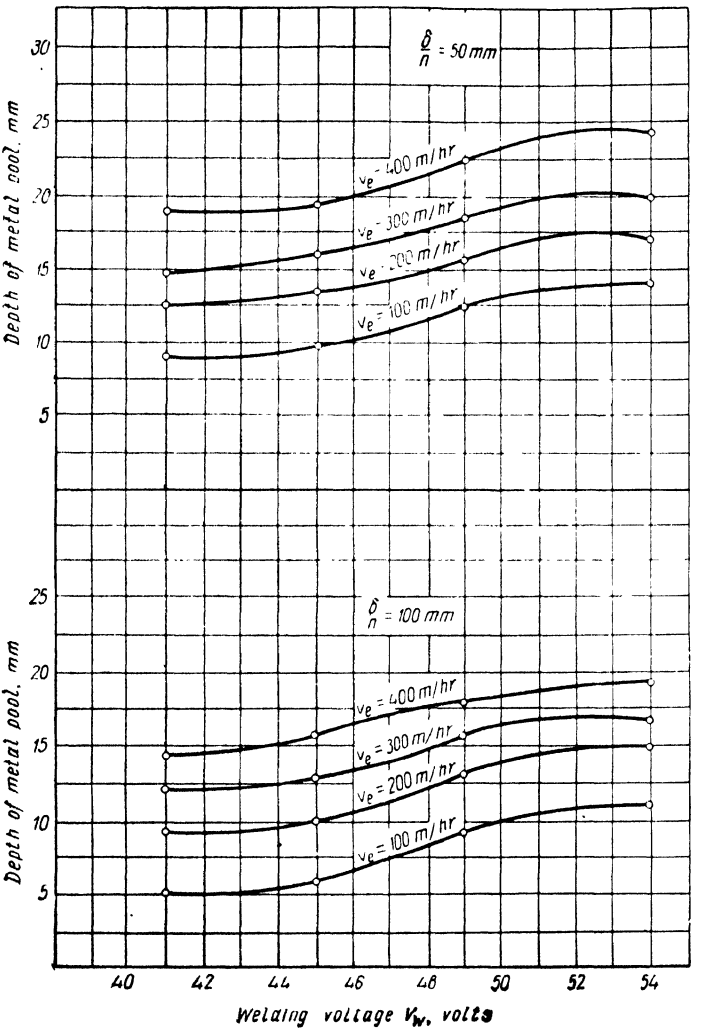
δ/n = 50 mm
v_e = 400 m/hr
v_e = 300 m/hr
v_e = 200 m/hr
v_e = 100 m/hr
Depth of metal pool, mm
δ/n = 100 mm
v_e = 400 m/hr
v_e = 300 m/hr
v_e = 200 m/hr
v_e = 100 m/hr
Depth of metal pool, mm
Welding voltage V_w, volts

Fig. 26. Depth of metal pool plotted against welding voltage at various welding speeds and various values of $\frac{\delta}{n}$ (electrode 3 mm in diameter).

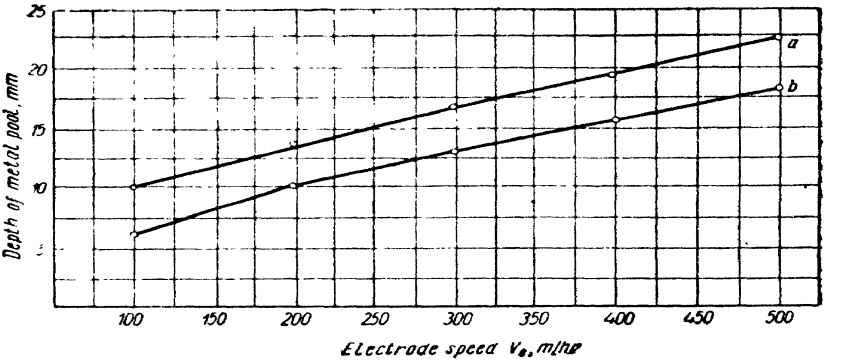

Fig. 27. Depth of metal pool plotted against welding speed at various values of $\frac{\delta}{n}$:

a — $\frac{\delta}{n}$ = 50 mm; *b* — $\frac{\delta}{n}$ = 100 mm (electrode 3 mm in diameter).

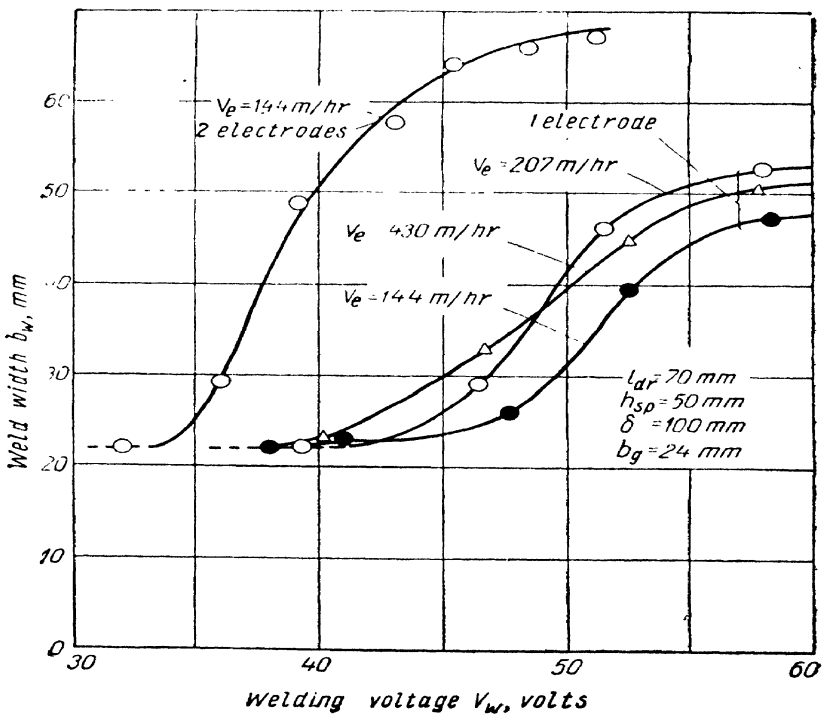

Fig. 28. Weld width plotted against welding voltage.

As the welding voltage is increased, the metal pool grows deeper (see Fig. 26). The picture in arc welding is different: any increase in the welding voltage results in poorer penetration as the arc becomes more mobile. Fig. 26 shows that any increase in electrode speed entails a proportional increase in the depth of the metal pool. This seems to be due to the increase in the heat input.

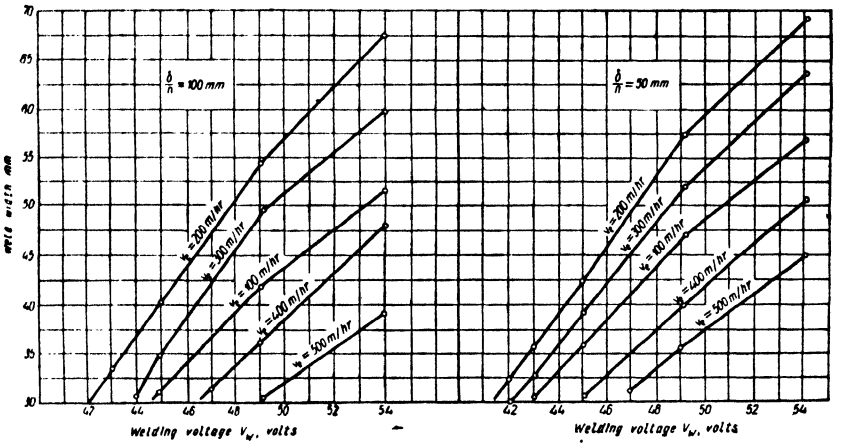

Fig. 29. Weld width plotted against welding voltage at various welding speeds.

In welding with fluxes of high electric conductivity, such as АНФ-1 based on fluorspar, and at high electrode speed, pieces of electrode wire may get into the weld before it can be melted in the slag pool.

As has been noted elsewhere, the aspect ratio ψ is the ratio of the width to the depth of the metal pool. Therefore, all the welding variables that increase the width of the weld and decrease the depth of the metal pool will increase the aspect ratio, and vice versa. Fig. 30 shows that the aspect ratio is directly proportional to the welding voltage and metal thickness per electrode and inversely proportional to electrode speed. Any increase in the rate of weaving motion of the electrode reduces the aspect ratio.

Fig. 31 shows the effect of the dry length of the electrode on the welding current and the width of fusion. Its effect is determined by the fact that the welding current heats the electrode. The temperature of the electrode before it goes into the slag pool rises quickly with the dry length, for heating increases the electrical resistance of the electrode metal and its rate of temperature rises (see Fig. 6). In fact, the resistance of the dry end of the electrode grows much more quickly than its length, as its temperature is rising and the electrode metal has a high thermal coefficient of resistance. When the electrode is of austenitic wire, the resistance of the dry end rises almost pro-

portionally to its length. As will be seen from Fig. 31, the increase in the dry length is accompanied by a marked decrease in the welding current. If the transformer has a straight-line volt-ampere characteristic, the welding voltage will change but little. If changes in the voltage are compensated by reducing the open-circuit voltage so

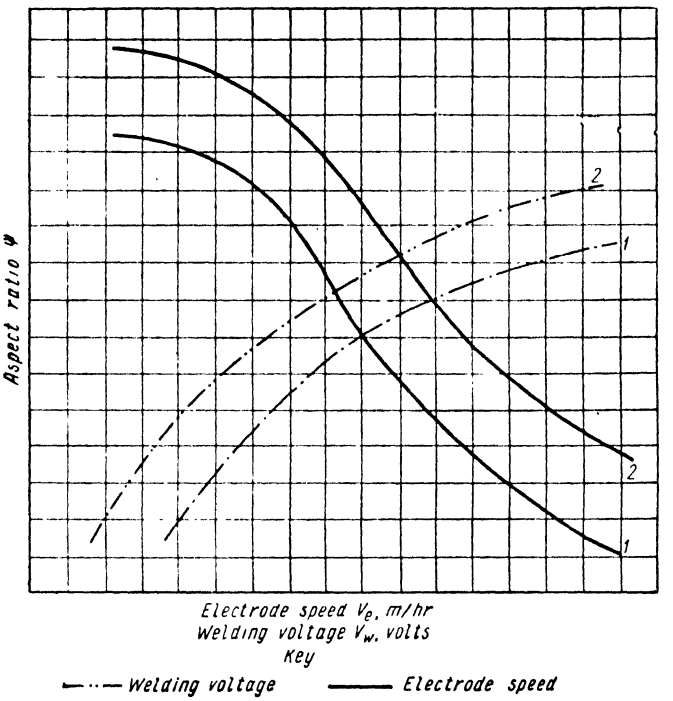

Fig. 30. Aspect ratio plotted as a function of welding speed and welding voltage at various values of $\frac{\delta}{n}$:
1 — $\frac{\delta}{n}$=50 mm; *2* — $\frac{\delta}{n}$=100 mm.

that the welding voltage remains constant, the decrease in the welding current will be still more pronounced.

The dry length of the electrode affects the width of the weld in much the same way. More specifically, the width of the weld decreases as the dry length increases. With a welding transformer of the constant-voltage type, variations in the dry length will cause the watts in the welding zone to vary almost in proportion to the welding current, and the welding speed will remain constant, as the amount of metal deposited per unit time will also be constant. Therefore, the depth of fusion will be increased with the welding current.

At first, an increase in the dry length of the electrode improves the stability of the welding. However, it is impaired when the dry length becomes great, as the electrode will be melted near the very surface of the slag pool, and the slag will sputter. If the dry end is short, the electrode guide will be heated, and if it is long, the electrode cannot be positioned accurately in the groove.

The optimal "dry" length is somewhat greater at higher electrode speeds. However, it may be taken as being constant so as not to complicate control of the welding machine and selection of a welding

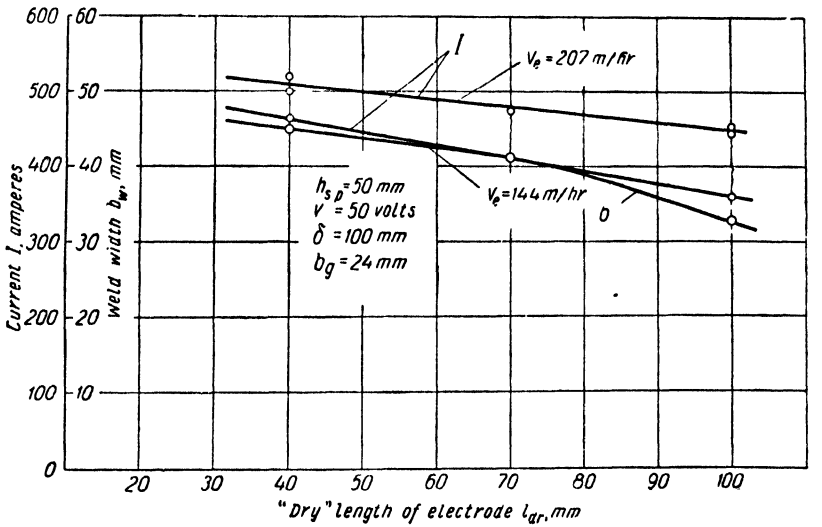

Fig. 31. Welding current and weld width plotted against dry length of electrode.

procedure. For ferritic electrode wire 3 mm in diameter it is 70 mm, and for austenitic wire, 50 mm.

The depth of the slag pool has little effect on the welding procedure, but strongly affects the width of the weld. The influence on the welding procedure is due to two factors which cancel out each other. For one thing, the depth to which the electrode has to be immersed increases with the depth of the pool, as does the total length of the electrode. This and an increase in the dry length of the electrode reduce the welding current. The increased surface area of the submerged electrode, however, makes the current rise. Within the practical range of welding conditions, the two factors almost completely cancel out each other (Fig. 32).

The depth of the slag pool affects heat penetration in that it changes the distribution of heat. As the pool grows deeper, a larger proportion of heat is spent to preheat the parent metal above the fusion zone. Out of this heat, only part is added to the heat applied imme-

diately to the fusion zone, while the balance is dissipated in the parent metal, without affecting heat penetration.

The depth of the slag pool encountered in welding practice varies from 30 to 70 mm. If, however, the other variables remain constant, the depth range is much narrower. The depth of the slag pool is affected most by electrode speed and metal thickness per electrode.

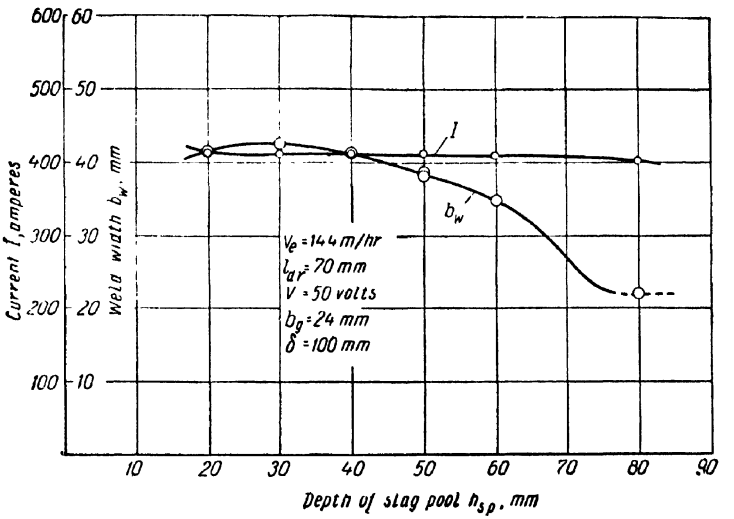

Fig. 32. Welding current and weld width plotted against depth of slag pool.

The optimal depth of the pool will vary directly with electrode speed v_e and inversely with metal thickness per electrode, $\frac{\delta}{n}$. Table 3 gives the recommended depth of the slag pool as a function of the ratio $\frac{v_e n}{\delta}$ for a dry length of 70 mm, a joint gap of 24 mm and a weaving-motion rate of 40 m/hr.

Table 3

$\frac{v_e n}{\delta}$ m hr/mm	1	1.5	2	3	4	5
Depth of slag pool, mm	35	40	45	50	55	60

As the depth of the slag pool is increased, the metal pool grows narrower but deeper, which fact adversely affects the direction of crystallisation in the weld metal and the resistance of the metal to

crystallisation cracks. Therefore, if the shape of the weld is to be improved, the depth of the slag pool should be kept at a minimum.

For a given plate thickness, *changes in the number of electrodes* equally affect both the power and the rate of travel of the heat source. On the other hand, the power will change more slowly than electrode speed when the latter is varied. That is why the proportional change of power and speed, characteristic of low-speed heat sources, results in wider isothermal surfaces and a smaller amount of heat lost to the moulding shoes. The net result is that the width of the weld sharply increases with the number of electrodes (Fig. 33).

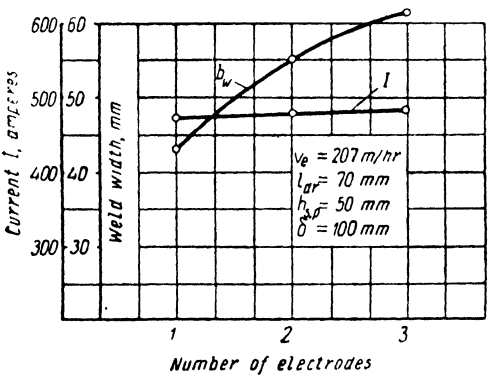

Fig. 33. Welding current and weld width plotted against number of electrodes.

Table 4 presents data on steel 100 mm thick welded by the electric slag process with one and two electrodes.

As to the reciprocal quantity, metal thickness per electrode, its increase to a certain value reduces the width of fusion to a point where it becomes less than the joint gap, and there will be poor penetration. This is the limit to the metal thickness which may be welded by the electric slag process.

When oscillating electrodes are employed, the limit of metal thickness per electrode somewhat increases with the number of electrodes, as relatively less heat is lost to the moulding blocks.

Table 4

Metal thickness, mm	Welding voltage, v	Electrode speed, m hr	Number of electrodes	Weld width, mm
100	44-46	200	2	50
		400	1	≤30 (poor fusion)
	48-50	200	2	63
		400	1	37
	52-54	200	2	70
		400	1	50

The width of the joint gap affects the welding procedure little, if at all. As it is increased, the welding current somewhat decreases

(Fig. 34). But it has a more pronounced effect on the width of the weld: the latter varies directly with the joint gap (Fig. 34). As in the case of welding voltage, this should be attributed to variations in energy per unit length due to an increase or decrease in welding speed at the constant power.

For electrode metal and electric power to be consumed sparingly, the least joint gap is most advantageous. However, its width must be sufficient for the electrode guide to be introduced into the gap. Besides, it is more difficult to fit up the parts for welding and to

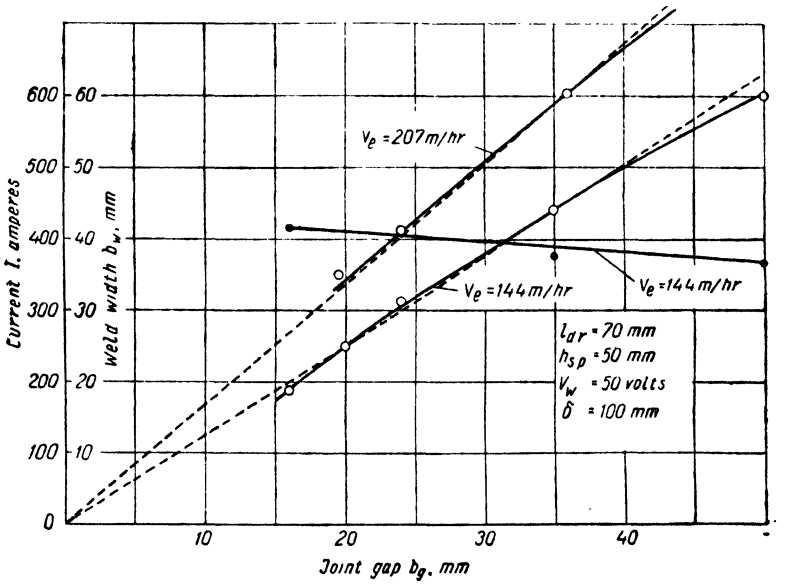

Fig. 34. Welding current and weld width vs. joint gap.

position the electrode in the groove when the joint gap is small. In most cases where electric slag welding is applicable, the gap varies between 25 and 30 mm. Such variations have no appreciable effect on the shape of the welded joint.

It should be noted that in welding steels containing more than 0.22 to 0.25 per cent carbon, the narrower joint gap does not practically result in a higher production rate. The explanation is that, with everything being equal, a narrower gap reduces the aspect ratio (as the width of the weld is decreased because of the higher welding speed), and vice versa. As will be seen later, a reduced aspect ratio has a decisive effect on the susceptibility of the weld metal to crystallisation cracks. If the resistance towards crystallisation cracks is to be retained, both the width of the joint gap and the electrode speed should be reduced or increased simultaneously. Fig. 113*b* shows

the width of the joint gap plotted against the critical electrode speed. (By critical speed is meant the maximum electrode speed at which cracks do not yet appear.) As the chart shows, variations in the joint gap do not practically affect the welding speed.

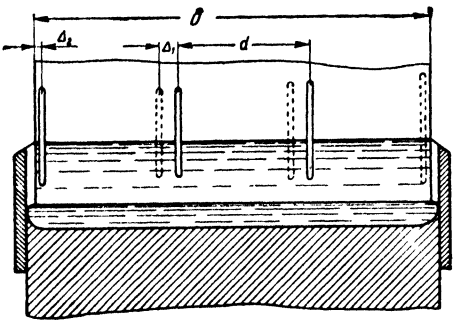

Fig. 35. Arrangement of electrodes in welding with weaving motion.

The rate of weaving motion. When oscillating electrodes are employed, a few more variables are added to a welding procedure. These are weaving-motion rate, the swing, and the dwell of electrodes at the moulding shoes. When several oscillating electrodes are used, account should also be taken of the electrode spacing and the quantity Δ_1, which is its derivative (Fig. 35).

The variables related to electrode oscillations have little effect on the welding procedure. When the welding transformer has a straight-line volt-ampere characteristic, the variations in weaving motion rate from zero to 130 m/hr cause the current to rise by an average of 5 per cent. The power will rise by the same amount, but the average width of the weld will be reduced rather than increased for reasons which will be explained later.

Fig. 36 shows the width of the weld plotted against the weaving motion rate of electrodes at various electrode speeds. With other conditions being equal, the weaving motion rate may be increased with electrode speed without causing poor fusion.

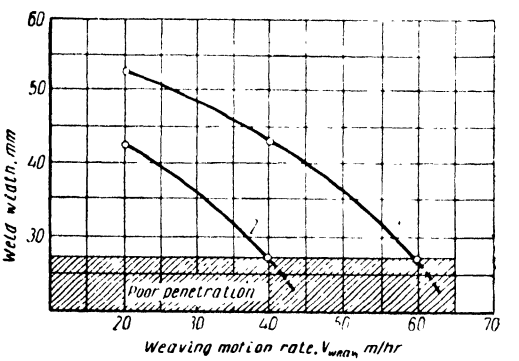

Fig. 36. Weld width plotted against rate of weaving motion at a welding speed of 200 m/hr (*1*) and 400 m/hr (*2*), with a welding voltage of 44 to 46 v and a metal thickness of 50 mm per electrode.

The effect of the weaving motion rate is most pronounced on the weld shape in the transverse direction.

Theoretically, when the power is uniformly distributed across the thickness of the workpiece and there is no heat abstraction through the surfaces, heat penetration will be uniform throughout the cross section. The abstraction of heat through the surfaces, mainly

through the moulding shoes, reduces the width of penetration near the surface.

As the molten metal is intimately mixed, it can be regarded in first approximation as a uniformly distributed heat of source, and the weld reinforcement, as an externally placed source of heat. This approach plausibly explains the wider penetration usually observed near the very surface, even if the electrode is stationary and positioned in the centre of the groove (Fig. 37).

Non-uniform penetration near the surface of the workpiece can be caused by (1) loss of heat to the moulding shoes which reduces the width of penetration (heat dissipation through the surfaces of the workpiece has practically no effect on the pattern of penetration); and (2) the weld reinforcement which increases the width of penetration.

When conventional moulding shoes with grooves 2 to 3 mm deep are used, the weld reinforcement does not make up for the cooling action of the moulding shoes.

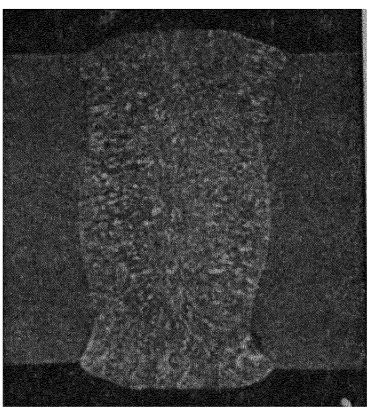

Fig. 37. Electric slag weld obtained without weaving motion of electrodes.

Even if the supplementary heat of the weld reinforcement were equal to the heat lost to the moulding shoes, penetration would nevertheless not become uniform. Indeed, macrographs show that the weld reinforcement improves penetration only near the very surface of the workpiece, while the action of the moulding shoes and heat abstraction through the surfaces affect it more deeply.

One way to maintain the desired width of penetration near the surface is to make the electrodes dwell in the extreme positions for a few seconds.

Non-uniform penetration in the depth of the weld may be attributed to the different time the electrode takes to move forward and backward. This effect is more marked when the swing of the electrode is large and the weaving motion rate low. Fig. 38 gives a typical macrograph of a butt weld cut out of a plate 150 mm thick, welded with a single oscillating electrode. The expansion (at *1*) is brought about by the weld reinforcement; the contraction (at *2*), by the heat lost to the moulding shoes; and the expansion (at *3*) as well as the contraction (at *4*) in the centre of the welded joint, by the different time of forward and backward travel.

The use of several oscillating electrodes introduces another cause of non-uniform penetration. As the electrodes are usually connected

rigidly to one another, their dwell at the surface entails undesired stops inside the groove, thus expanding penetration. To minimise this effect, the swing should be shorter than the electrode spacing.

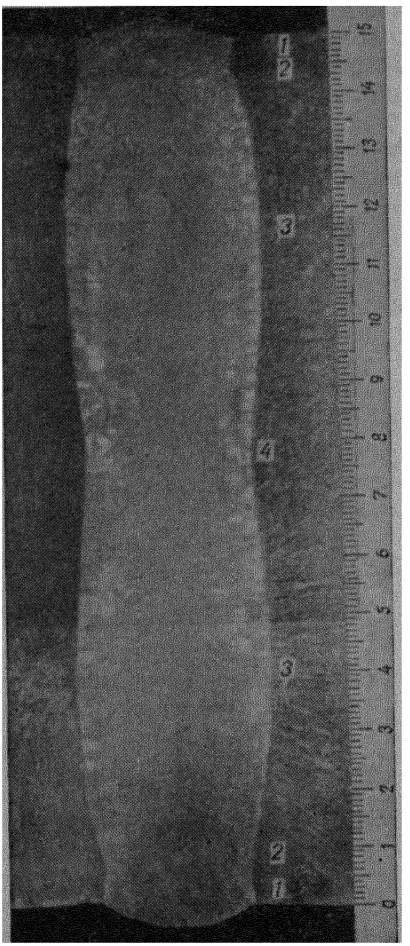

Fig. 38. Electric slag weld made with one weaving electrode.

For a given plate thickness δ the electrode spacing d can be obtained from the equation

$$d = \frac{\delta + \Delta_1 - 2\Delta_2}{n},$$

where n is the number of electrodes. The other quantities are shown in Fig. 35.

For moulding shoes with grooves from 2 to 3 mm deep, the quantity Δ_2 is 4 to 7 mm. For grooves 10 mm deep, the quantity Δ_2 will be anywhere from zero to 2 mm; and the electrode will extend outside the workpiece.

The quantity Δ_1 and, consequently, d have a most marked effect on the cross section of the weld. If Δ_1 is properly chosen and maintained in welding, the edges will be well penetrated without unduly increasing the average width of fusion which so often impairs the soundness of welded joints.

The value of Δ_1 at which penetration is most uniform does not depend on the thickness of the workpiece. It is governed by the weaving motion rate of the electrodes $v_{w.m}$ and the time of dwell τ at the moulding shoes:

$$\Delta_1 = v_{w.m}\tau - 20 \text{ mm}.$$

As an additional guarantee against bridging, wider penetration is sometimes allowed between the stops of the electrodes, in which case it is assumed that

$$\Delta_1 = v_{w.m}\tau - (25 \text{ to } 30) \text{ mm},$$

Table 5

Relations Between Welding Conditions and Weld Variables

Weld variables	Effect of increase in welding conditions							
	Electrode speed, m hr		Metal thickness per electrode, mm	Welding voltage, v	Weaving motion, m hr	Depth of slag pool, mm	Dry length of electrode, mm	Width of gap, mm
	Up to 200 at under 400 a	Over 200 at over 400 a						
Depth of metal pool, h	Increases	Increases	Decreases	Increases insignificantly	Remains unchanged	Decreases insignificantly	Decreases	Remains unchanged
Weld width, b	Increases	Decreases	Decreases insignificantly	Increases	Decreases	Decreases	Remains unchanged	Increases
Aspect ratio of weld, ψ	Decreases insignificantly	Decreases	Increases	Increases	Decreases	Decreases	Increases insignificantly	Increases
Proportion of parent metal in weld, γ	Increases insignificantly	Decreases	Decreases insignificantly	Increases	Decreases	Decreases	Remains unchanged	Increases

Wider penetration at reduced rates of weaving motion is due to the ununiform heating of the parent metal. Heat input is usually much above the average in the wake of the electrodes, and the edges are melted more deeply than if the heat were distributed uniformly across the thickness. After the electrode is withdrawn, the heating drops to below the average. Because of the intimate mixing of the slag pool coupled with the uniform distribution of temperature in the metal pool, however, this heat is usually sufficient for the downflowing metal to fuse with the edges that were melted before.

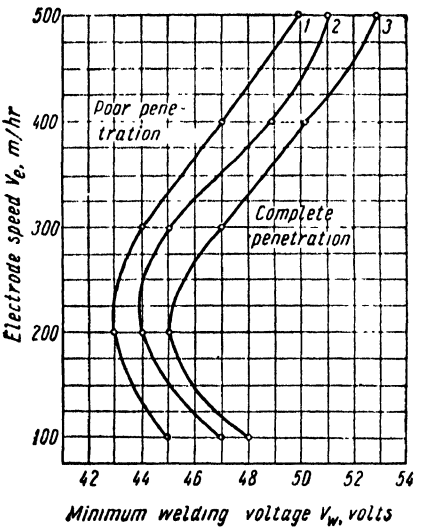

Fig. 39. Ratio of least welding voltage to welding speed giving full penetration and fusion at various thicknesses per electrode:
1—50 mm; *2*—100 mm; *3*—150 mm.

The total power and the welding speed do not change with the rate of weaving motion. The expansion of the weld is due to an increase in the width and a decrease in the effective length of the heat source. As a result, the average value of the heat flux becomes progressively smaller, receding from the bottom of the metal pool towards the parent metal and is increased where the edges are melted. Unfortunately, this does not improve the shape of the metal pool, as its depth increases rather than decreases in the wake of the electrode.

If the weld is to be sound, the optimum variables should be chosen for a given procedure, with due account taken of their influence upon one another. Table 5 shows the influence of the basic variables on the shape and size of the welded joint. The table may serve as a guide in choosing the optimal welding procedure. The effect of each variable is examined on the assumption that the other variables remain constant.

In selecting variables such as electrode speed v_e, and welding voltage V_w, it should be borne in mind that for each value of v_e there is a minimum welding voltage at which poor fusion is unlikely to occur. The appropriate curves are given in Fig. 39.

4. Structure of Weld Metal in Electric Slag Welding

The structure of weld metal has a decisive effect on its mechanical properties, its susceptibility to crystallisation cracks, its resistance to corrosion, and some other properties. The structure of weld metal

is in turn governed by the chemical analysis and the conditions of the primary crystallisation of the weld pool. In electric slag welding, the primary crystallisation of the weld pool is characterised by (a) a considerable volume and a slow cooling rate of the molten metal, which results in oversized grains; (b) uniform abstraction of heat throughout the periphery of the welded joint, which results in the radial-axial grain growth (away from the edges towards the middle of the welded joint); and (c) presence of a considerable volume of molten metal and slag above the growing grains, which fact improves the degassing of the pool.

Crystallisation in the weld pool starts with the partially fused grains of the parent metal and the underlying portions of the weld metal. Grains grow at right angles to the cooling surface, which is a curvilinear interface between the liquid and the solid phases.

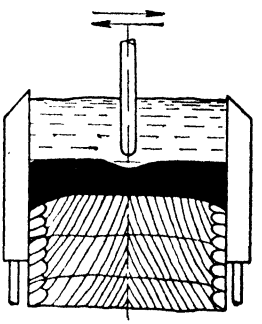

Fig. 40. Schematic diagram of metal pool in welding with one moving electrode.

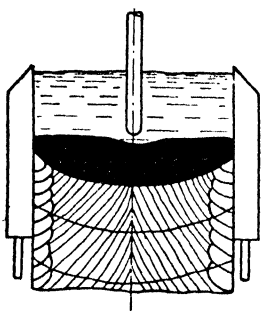

Fig. 41. Schematic diagram of metal pool in welding with one fixed electrode.

The outline of the interface changes with the shape of the metal pool. Fig. 40 shows schematically the shape of the metal pool for welding with one moving electrode, and Fig. 41, for welding with one stationary or plate electrode. It should be stressed that these are general cases, and the shape of the metal pool may be entirely different, depending on the actual welding conditions.

As is the case with the other processes of fusion welding, crystallisation in electric slag welding goes on intermittently, and the weld metal has a laminated structure. As will be seen from the macrographs in Fig. 42*a*, when welding is done with a stationary or a plate electrode, the crystallisation layers are distributed uniformly throughout the section of the weld, following the outline of the weld pool. In welding with a moving electrode (Fig. 42*b*), the layers are also distributed uniformly across the section of the weld, however supplemented by clearly defined layers built up by the weaving

motion of the electrode. In all cases, columnar grains grow through the crystallisation layers without changing either their direction or shape.

The grain size and microstructure of the electric slag weld depend above all on the conditions in which the metal solidifies. These are (a) the temperature of the weld pool and the time at this temperature; (b) the direction and rate of heat abstraction; (c) the mixing of the molten metal by convection, electromagnetic forces, and the travel of the heat source; (d) the chemical analysis of the weld metal and the presence of impurities and insolubles in it, etc. The factors

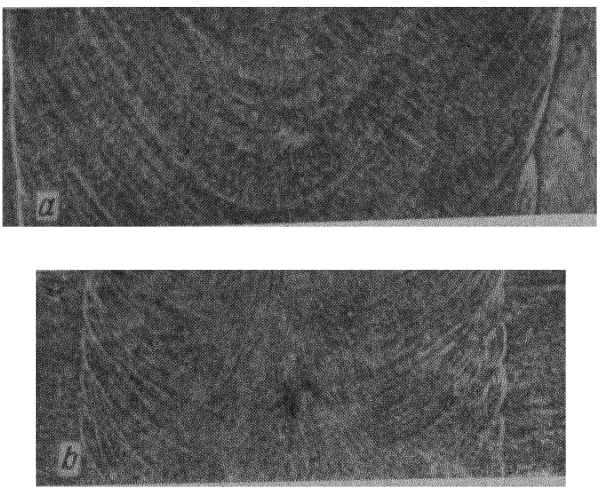

Fig 42. Crystallisation layers:
a — in welding with fixed electrode, *b* — in welding with moving electrode.

affecting primary crystallisation and, consequently, the structure and grain size of the solidifying metal are too many, and it is hard to trace their effect on the results obtained. At present, there is no crystallisation theory—even for ingots and steel castings—which would make it possible to predict the type of microstructure and grain size of the solidifying metal. In default of an adequate crystallisation theory, the structure of electric slag welds and, for that matter, of ingots can only be evaluated on the basis of a macroscopic examination of welds made under various conditions.

The electric slag process, as applied to structural carbon and low-alloy steels, produces a wide range of weld structures.

Four types of weld structures may be singled out in slag welding the above steels.

One whose macrographs are shown in Figs. 43*a* and *b*, and schematically illustrated in Fig. 11, has two areas of crystallisation. The

first area, which henceforth will be referred to as the area of coarse columnar grains (at *1* in Fig. 44), is to be found on the periphery of the welded joint. In this area the grains grow predominantly in the direction of heat abstraction. As the area of coarse columnar grains forms, the rate of heat abstraction slows down and at some distance

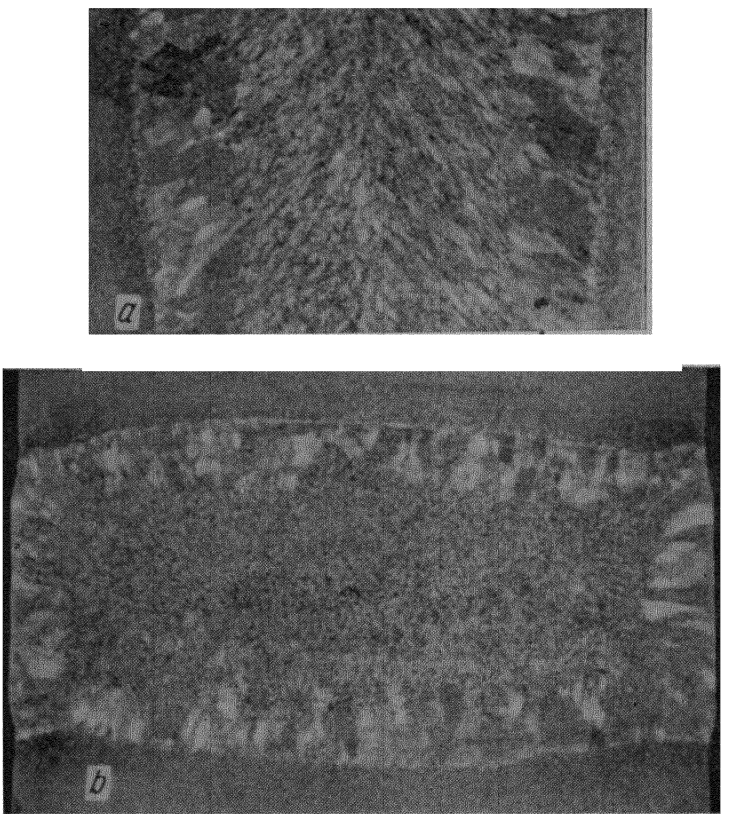

Fig. 43. Macrostructure of Type I weld:
a—section along weld; *b*—section across weld.

from the line of fusion coarse columnar grains change into the finer grains of the second area (at *2* in Fig. 44), which henceforth will be referred to as the area of fine columnar grains.

The width of the first and the second areas varies within broad limits with the analysis of the weld, the temperature of the weld pool, the rate and direction of heat abstraction, and the shape of the weld pool.

The increased content of carbon and manganese in the weld metal results in a wider region of coarse columnar grains, while higher

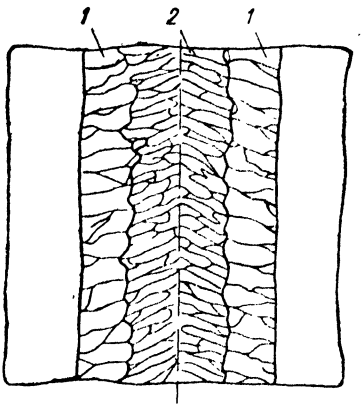

Fig. 44. Schematic structure of Type I weld.

values of welding current seem to raise the temperature of the weld pool to a point where the metal is overheated, and the area of coarse columnar grains is narrower.

When the rate of heat abstraction is reduced (which is done in the case of welding with limited heat abstraction, with preheating, etc.), the zone of coarse columnar grains will also be reduced.

Both coarse and fine columnar grains grow at right angles to the surface, and are slightly inclined towards theheat centre of the weld pool. The contour of the cooling surface is governed by the shape of the metal pool which also determines the direction

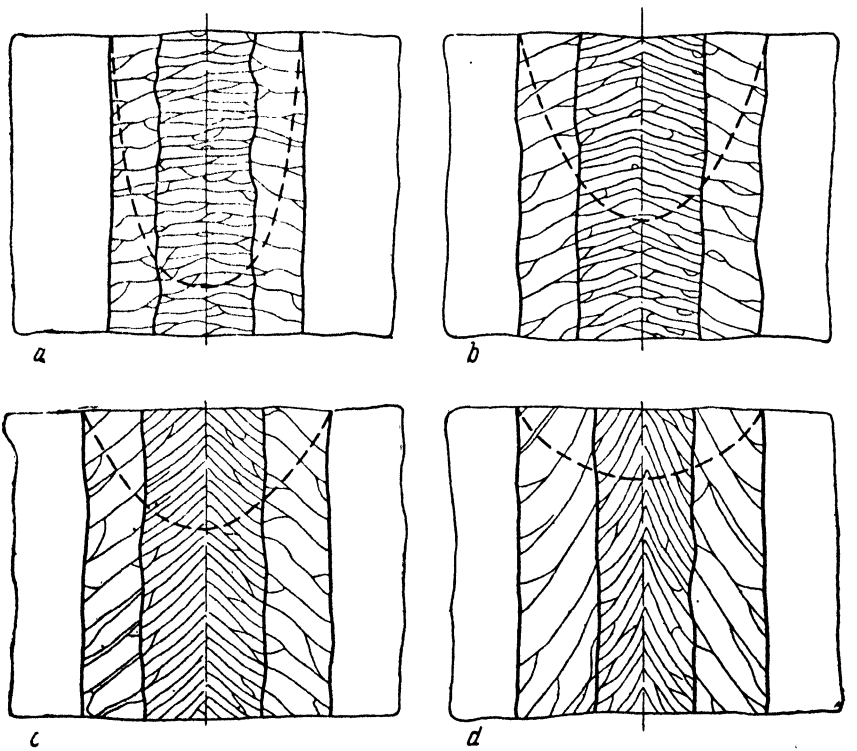

Fig. 45. Effect of metal pool shape on the growth of columnar crystals:

a—crystalline grains meeting with end faces on (0.8 aspect ratio); *b*—crystalline grains meeting at an oblique angle (1.5 aspect ratio); *c*—crystalline grains meeting at a sharp angle (2.0 aspect ratio); *d*—crystalline grains meeting with side faces on (3.0 aspect ratio).

of growth for columnar grains and the encounter of the grains growing away from the opposite edges. Grains growing in a radial direction will meet with their end faces on (Fig. 45*a*) either at an obtuse angle (Fig. 45*b*) or at an acute angle (Fig. 45*c*), depending on the aspect ratio of the metal pool. Grains may grow in an axial direction, turning about the axis of the weld so that their side faces meet (Fig. 45*d*).

With other factors (chemical analysis, joint type) being equal, small aspect ratio welds in which grains meet with their ends or at obtuse angles show a decreased resistance to crystallisation cracks. The cracks will develop along the axis of the weld (Figs. 46*a* and *b*) or between adjacent fine grains (Figs. 47*a* and *b*). Specimens cut out along the joint will show cracks running as in Fig. 47*c*.

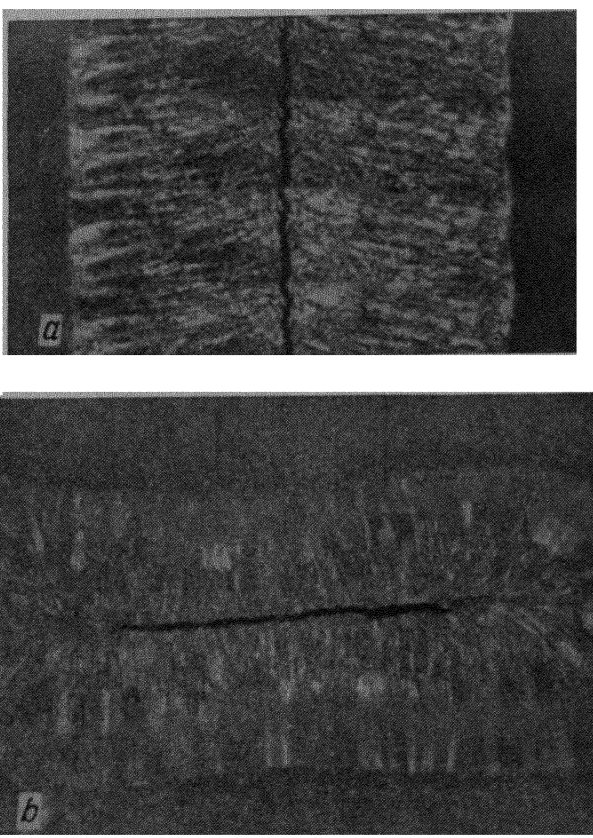

Fig. 46. Cracks between end faces of crystalline grains:
a—section along weld; b—section across weld.

The cracks run along the boundaries of dendrites; their direction does not coincide, as a rule, with the boundaries of secondary grains. Welds in which grains meet at an acute angle or, due to the supplementary turning towards the heat centre of the weld pool, with their sides on, offer a higher resistance to crystallisation cracks.

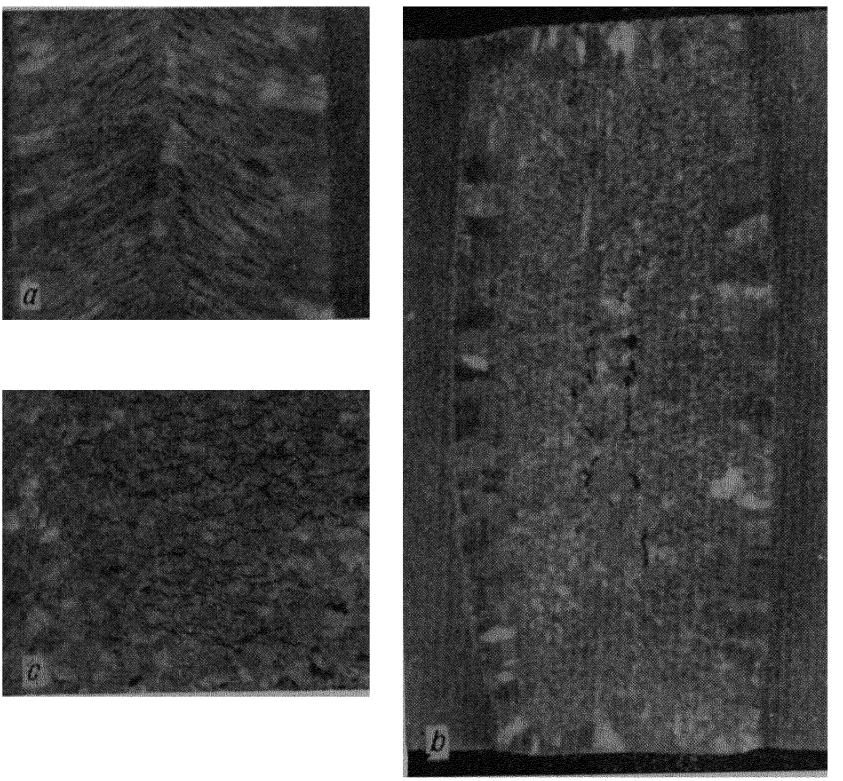

Fig. 47. Cracks between adjacent columnar grains:
a– section along weld; *b*—section across weld; *c*—section along gap.

This pattern of grain growth is characteristic of welds with medium aspect ratios.

The greatest resistance to crystallisation cracks is offered by welds in which columnar grains grow in an axial or near axial direction (Fig. 48). This pattern of growth is characteristic of welds with a dish-shaped metal pool (a large aspect ratio). From the foregoing it follows that the resistance of the weld metal to crystallisation cracks can be controlled by varying the shape of the weld pool. However, the mechanism by virtue of which the shape of the weld pool affects the

Table 6

Mechanical Properties of Weld Metal

Series of experiments	Weld area	Tensile tests*				Impact toughness, kgm/sq cm**		Composition, per cent, of weld length from which specimens were taken				
		Yield strength kg/sq mm	Ultimate strength, kg/sq mm	Elongation, per cent	Reduction of area, per cent	at +20°C	at −20°C	C	Mn	Si	S	P
I	Coarse grains	46.7	63.4	17.4	37.4	7.0 9.1	3.1 7.3	0.25	1.22	0.12	0.026	0.03
	Fine grains	38.5	59.4	25.7	54.1	3.6 7.0	0.8 6.0	0.25	1.23	0.11	0.025	0.03
II	Coarse grains	36.4	55.7	23.5	43.3	10.4 11.0	5.9 7.1	0.21	0.84	0.15	0.041	0.023
	Fine grains	32.5	52.4	36.3	54.8	6.5 7.0	1.3 2.0	0.21	0.82	0.15	0.040	0.024
III	Coarse grains	33.1	53.8	27.1	50.1	14.0 16.8	8.3 11.3	0.15	1.22	0.10	0.028	0.031
	Fine grains	31.8	52.8	34.1	55.1	12.8 14.1	4.4 10.0	0.15	1.23	0.10	0.027	0.030
IV	Coarse grains	34.8	51.8	21.8	49.8	11.3 12.6	4.8 6.1	0.17	1.40	0.17	0.027	0.032
	Fine grains	32.8	51.1	29.8	56.3	6.0 9.1	2.5 4.5	0.17	1.39	0.18	0.027	0.033

* Average values for 8 to 10 specimens.
** Maximum and minimum values.

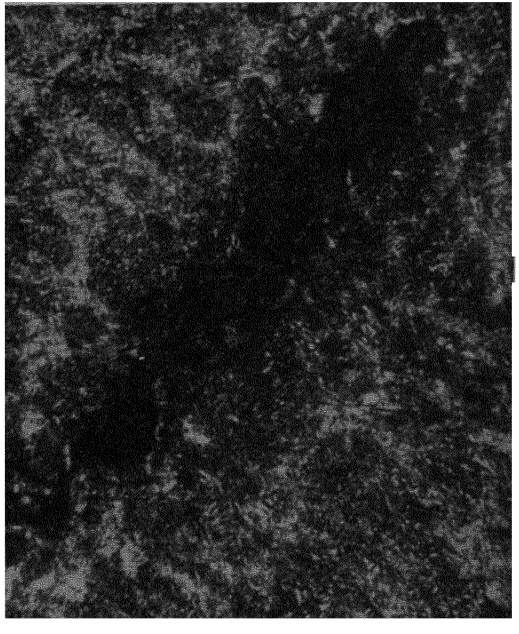

Fig. 48. Cracks at boundaries of dendrites (magnification × 44).

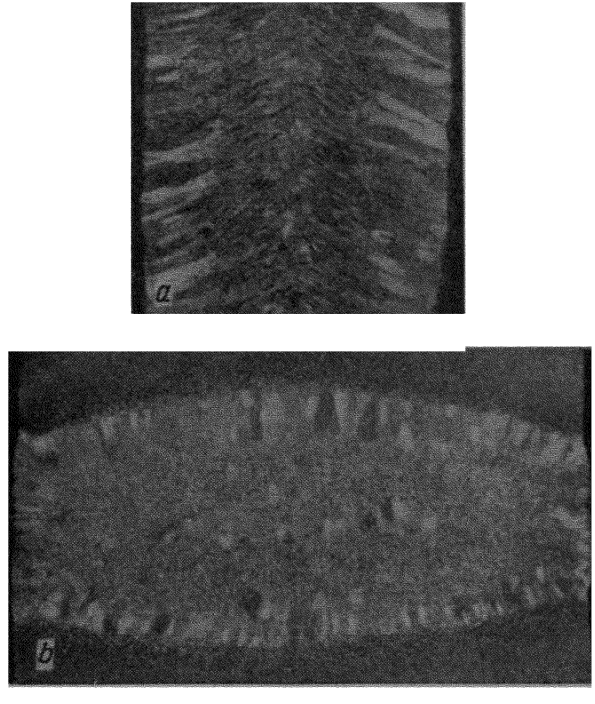

Fig. 49. Macrostructure of Type II weld: *a*—section along weld, *b*—section across weld

pattern of columnar grain growth is not yet fully understood. It may be supposed, however, that the direction of growth of primary grains affects the amount and properties of the eutectic and its position relative to the tensile stresses which set in during crystallisation in the weld, and the possibility of "healing" cracks which may develop. When the electric slag process is applied to structural carbon and low-alloy steels, cracks will not, as a rule, extend to the surface of the weld (Figs. 46 and 47), and are difficult to detect. In welding austenitic steels, cracks, as often as not, appear on the surface.

The metal in the area of coarse columnar grains is dense and uniform. This is borne out by the absence of cracks and cavities and by fewer non-metallic inclusions in this region. The difference in the structure of the two areas tells also on the mechanical properties of the metal. Referring to Table 6 (which tabulates data on welding structural carbon steels), it will be noted that the metal of the coarse-grain area is tougher at both room and low temperatures, and shows a greater strength and reduced ductility. The difference in strength across the section of the weld metal grows more pronounced as the carbon content increases.

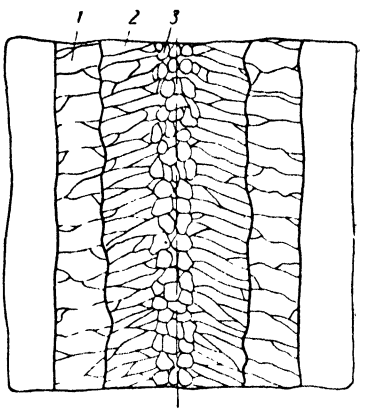

Fig. 50. Diagram of structure of Type II weld.

Welding with a plate electrode produces welds with the first type of structure. They are characterised by somewhat smaller fine columnar grains. This seems to be due to the fact that the electrode metal is less overheated.

The second type of structure illustrated by the macrographs in Figs. 49*a* and *b* and by a chart in Fig. 50, has three areas of crystallisation. Apart from a coarse-grain and a fine-grain area (at *1* and *2*, respectively), there is a region of equi-axial grains (at *3* in the chart) in the middle of the weld, from 4 to 8 mm wide and not extending to the surface of the plates. The third area is evidence that the cooling of the middle portion of the weld pool is slowed down considerably. This pattern is usually observed in welding structural carbon steels containing over 0.35 per cent carbon with heavy current. Crystallisation cracks in this type of weld develop in the fine-grain area, without extending into the equi-axial-grain region. The resistance to crystallisation cracks in this case also depends on the direction of growth of fine grains. The mechanical properties of the weld metal also vary from area to area, as is the case with the first type of structure.

The third type of structure, as will be seen from the macrographs in Figs. 51*a* and *b*, has only an area of coarse columnar grains growing in an axial direction, which determines the high resistance of this

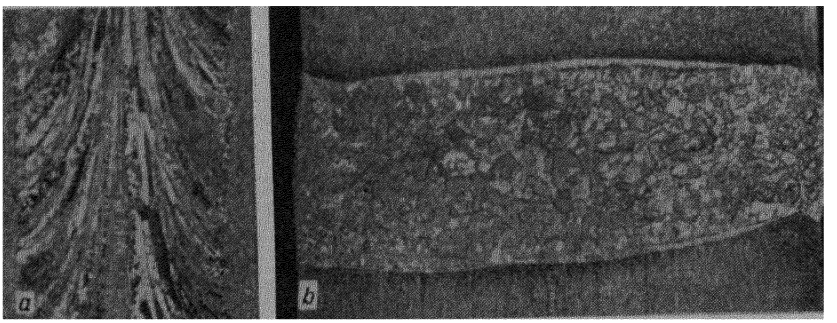

Fig. 51 Diagram of structure of Type III weld:
a section along weld *b* section across weld

type of weld to crystallisation cracks, and the uniformity of mechanical properties across the entire section. This type of weld is observed in welding various steels with low values of current and voltage and a large metal thickness per electrode.

The fourth type of structure has only an area of fine columnar grains growing away from the line of fusion towards the axis of the weld (Figs. 52*a* and *b*). As is the case with the first and second types of welds, the direction of growth and the pattern of encounter of col-

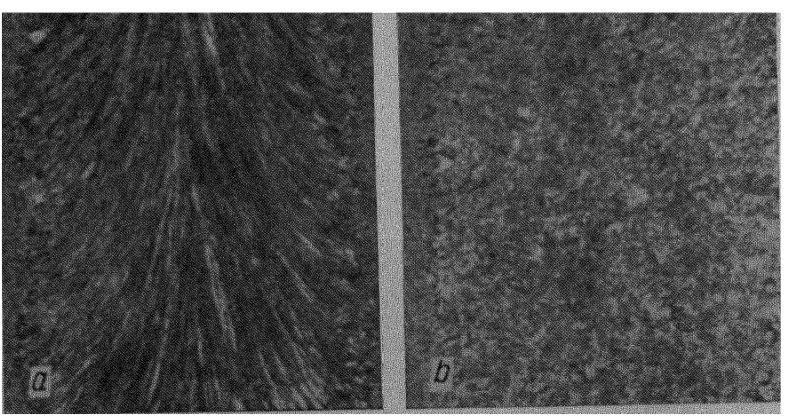

Fig. 52. **Macrostructure of Type IV weld:**
***a*—section along weld; *b*—section across weld.**

umnar grains govern the resistance of the weld metal to crystallisation cracks and are, in turn, determined by the shape of the metal pool. The mechanical properties of the weld are uniform throughout the section. This type of weld is produced when penetration into the parent metal is low, or when welding light sections, or when the welding process is intermittent. The reduced content of carbon and manganese in the weld metal promotes the formation of this type of weld.

Studies of the primary structure of welds have shown that the coarse columnar grains in all the types of welds are colonies of poorly ramified dendrites, extending in the direction of predominant heat abstraction and having only trunks and rudimentary first-order axes (Fig. 53*a*). The fine columnar grains are also dendrites. The dendrites of this area are bigger than those of the first area and have well-developed second-order axes (Fig. 53*b*). The dendrites of the equi-axial-grain region (at *3* in Fig. 50) are much more ramified than the columnar grains (Fig. 53*c*).

The columnar grains and the grains of the parent metal differ in size (Fig. 54*a*). The columnar grains are thicker and separate from one another by a ferrite network. In structural carbon steels, the metal of this area, in the first and second type of weld, has a Widmanstatten ferrite plus pearlite structure (Fig. 55*a*). The third type of weld in carbon steels has areas of fine lamellar pearlite (Fig. 55*b*). At some distance from the line of fusion, the coarse columnar grains in the first and second type of weld change into fine grains (Fig. 54).

Fig. 53. Primary structure of weld metal (magnification×60):
a—coarse columnar grains; *b*—fine columnar grains; *c*—equi-axial grains.

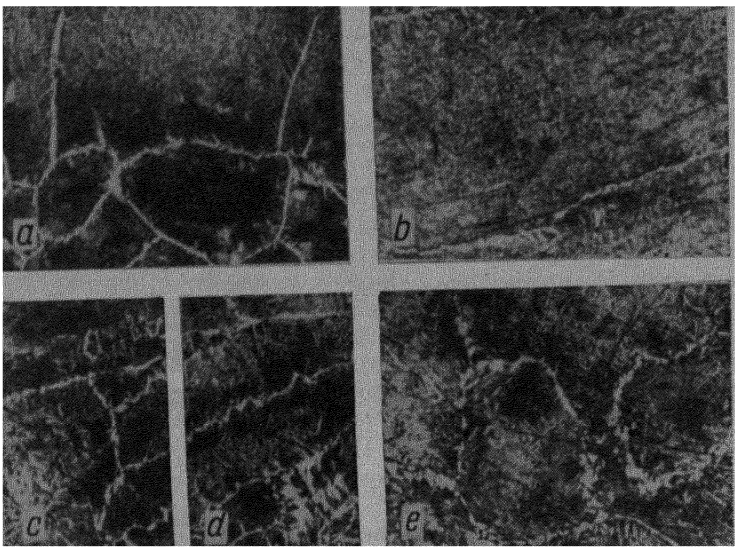

Fig. 54. Secondary structure of weld metal (magnification×60):
a growth of coarse columnar grains away from line of fusion; *b*—coarse columnar crystalline grain, *c* - change from coarse to fine columnar crystalline grain, *d* fine columnar crystalline grains; *e*—equi-axial crystalline grains.

In the fourth type of weld, the fine grains grow immediately away from the line of fusion. The grains in this zone are finer than the coarse columnar grains (Fig. 54). In the first and the second type of weld, the metal in the fine-grain area has a coarser Widmanstatten structure than in the coarse-grain zone (Fig. 55*c*).

The fourth type of weld has both ferrite and pearlite structure, with the ferrite forming a network on the grain boundaries, while the pearlite shows fairly fine lamellae (Fig. 55). The indifferently oriented equi-axial grains (at *3* in Fig. 50) are coarse crystals bounded by a ferrite network (Fig. 54). The weld metal in this zone has ferrite plus pearlite areas.

From the foregoing it follows that the crystalline grains in electric slag welds are relatively large.

The primary structure of electric slag welds in carbon and low-alloy steels is refined by subsequent heat treatment. The most commonly employed method is normalising followed by high tempering. Heat treatment improves the ductility of the weld metal and while reducing its strength, increases its impact toughness.

Another procedure is to introduce modifiers into the molten metal. These are minute amounts of aluminium, titanium, vanadium, etc., which considerably refine the original structure of the weld metal. They either provide more nodules of crystallisation or slow

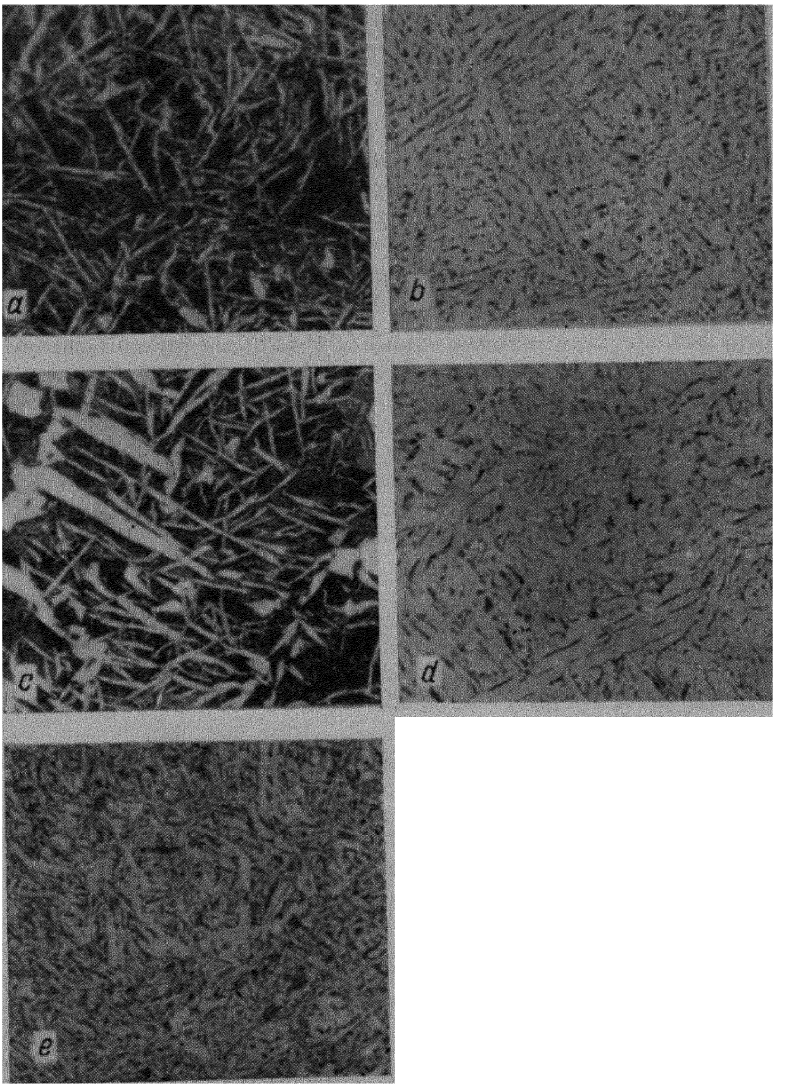

Fig. 55. Secondary structure of weld metal (magnification×150): *a*—coarse columnar grains in Type I and II weld; *b*—coarse columnar grains in Type III weld; *c*—fine columnar grains in Type I and II welds; *d*—fine columnar grains in Type IV weld; *e*—equi-axial grains.

down the rate of grain growth by forming a surface-active film enveloping the growing crystals. This technique, however, has not yet found wide commercial use, the reason being that it is difficult to meter out accurately and introduce into the weld pool the desired amount of the modifying agent. Besides, the refinement of the weld structure is not accompanied in this case by improvement in the ductility of the whole welded joint, as the weld-affected region retains a coarse-grained structure which cannot be eliminated by any other method except heat treatment.

Other techniques of grain refinement involve the use of ultrasonics, mechanical vibration of the weld pool, etc.

Chapter III

METALLURGY OF ELECTRIC SLAG WELDING

In electric slag welding, the final chemical analysis and properties of the weld metal are determined by the source materials and the metallurgical reactions during welding, i. e., the interaction of molten metal, slag and the gaseous phase.

The nature and direction of these reactions may greatly change the design composition of the weld metal as calculated by the rule of mixing.

The design composition of the weld metal is determined by the well-known equation:

$$[M]_d = \gamma [M]_p + (1 - \gamma) [M]_e, \quad (1)$$

where $[M]_d$ — design concentration of a given element in the weld metal in per cent;

$[M]_p$ — concentration of the same element in the parent metal in per cent;

$[M]_e$ — same for the electrode metal in per cent;

γ — proportion of the parent metal in the weld metal in per cent.

The difference between the actual composition of the weld metal, as determined by chemical analysis, and the design composition

$$\Delta M = [M]_w - [M]_d \quad (2)$$

shows how much of a given element has gone into the weld metal during welding, which, in turn, indicates the direction and rate of the metallurgical reactions. This is the basis on which the metallurgical reactions can be controlled by properly choosing additions and welding procedures so as to obtain a weld with the desired chemical analysis and properties.

In electric slag welding the melting metal of the electrode, the surface of the molten metal, and the melted edges of the parent metal are constantly washed by molten flux or slag.

The fluxes employed in electric slag welding are composite silicates which are formed by fusing the ingredients containing SiO_2, MnO, CaO, MgO and Al_2O_3. Calcium fluoride (CaF_2) is also intro-

duced so as to reduce the viscosity of the slag and to improve its electrical conductivity.

When electric slag welding is applied to carbon and low-alloy steels, the most important reactions between the slag and the metal are those involving manganese, silicon and carbon as well as sulphur and phosphorus, which are harmful impurities.

The content of the above-mentioned elements in the weld metal determines to a great extent the strength of the weld metal and the possibility of obtaining a sound welded joint free from cracks and voids. For many high-alloy steels, the reactions involving chromium, titanium, aluminium and some other elements are very important.

The rate and direction of the reactions in structural carbon steels are determined by a variety of factors, principal among which are the concentration of these elements in the molten metal and of their oxides in the slag, the temperature in the reaction zone, and the area and time of contact between the metal and slag taking part in the reaction.

In turn, the concentration of the elements in the metal and slag depends on the source materials employed, on the composition of the electrode wire and flux, and on the rate of feed of flux into the slag pool.

The temperature and conditions of contact vary with welding procedures.

We shall now turn to the metallurgical reactions taking place in welding structural carbon steels by the electric slag process.

1. Reactions of Manganese and Silicon

For slags containing MnO and SiO_2, the reactions between metal and slag can be written as follows:

$$[Fe]+(MnO) \rightleftarrows [Mn]+(FeO); \quad (3)$$

$$2[Fe]+(SiO_2) \rightleftarrows [Si]+2(FeO). \quad (4)$$

From these reactions it follows that if the content of manganese and silicon oxides increases, while the content of FeO remains constant, the concentration of these elements in the weld metal should increase in proportion. Table 7 presents experimental data on the electric slag welding of boiler steel 22K with Св-08ГА wire and fluxes containing various amounts of MnO, using 600a.

Table 7

MnO content in flux, per cent . . .	52	58	61	67
Mn content in weld, per cent . . .	1.00	1.04	1.28	1.51

The accumulation of FeO in the slag retards the reduction of Mn and Si, especially in welding long joints or in chill-casting when no fresh flux is added to the slag pool.

Reactions (3) and (4) result in the accumulation of FeO in the slag pool; the oxidising effect of the slag increases, and the oxidation of manganese and silicon is intensified. Fig. 56 shows the concentration of manganese and silicon plotted against the length of the weld made in killed steel Ст.3, 120 mm thick with two electrodes (Св-10ГС wire; АН-8 flux; 400-420 a at 46-48 v a.c.; with no fresh flux added to the slag pool during welding).

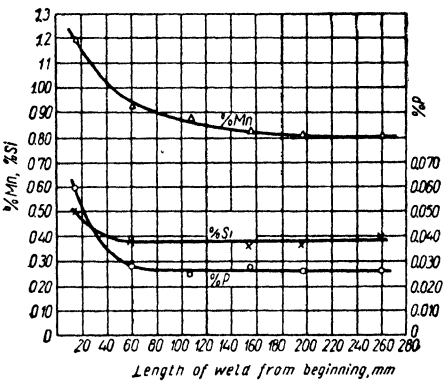

Fig. 56. Variations in content of impurities along a weld made in killed low-carbon steel with Св-10ГС wire.

In electric slag welding the most convenient method of tracing the transfer (or recovery) of elements in the weld metal is to use a water-cooled copper chill, as this excludes the mistakes otherwise made in calculating the proportion of the parent metal in the weld. Fig. 57 shows the recovery of manganese and silicon plotted against the length of ingots welded with Св-08А wire. The welding was done in a chill 40×120 mm in cross section without replenishing the slag pool. The welding conditions were: wire 3 mm dia; current 400-420 a; voltage 46-48 v; depth of the slag pool 45-50 mm; dry length of the electrode 80 mm; weaving motion rate 20 m/hr; dwell of the electrode in the extreme positions 5 sec. If not specified otherwise, these conditions were maintained in all the experiments discussed below. When two electrodes were employed, they were spaced 60 mm apart. The current and voltage were measured for each electrode separately and in all the experiments were as indicated above. In welding with two electrodes, the aggregate current was 800 to 850 a.

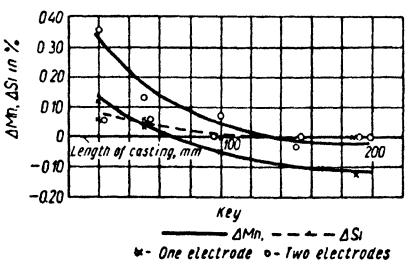

Fig. 57. Variations in recovery of manganese and silicon with length of ingots welded with one or two electrodes, Grade Св-08А, and АН-8 flux.

Referring to Fig. 57, it will be seen that the recovery of manganese and silicon went on at an increased rate at the beginning, but slowed

down as the ingot was built up. At 80 to 150 mm from the beginning, the rate of recovery levelled off and remained practically unchanged till the end.

A steady rate of recovery was observed in normal slag welding of long joints with fresh batches of flux added to the slag pool. With the same concentrations of MnO and FeO, an increase in the temperature of the reaction zone intensified the reduction of manganese from the slag. This, incidentally, was observed when welding with two electrodes.

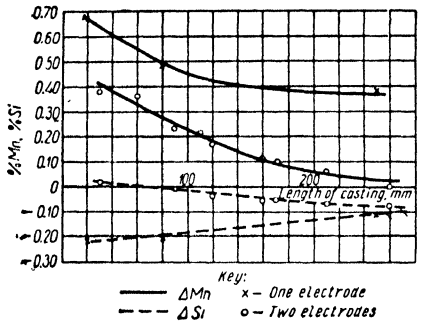

Fig. 58. Variations in recovery of manganese and silicon with length of ingots welded with AH-8 flux and one or two Св-10ГС wire electrodes.

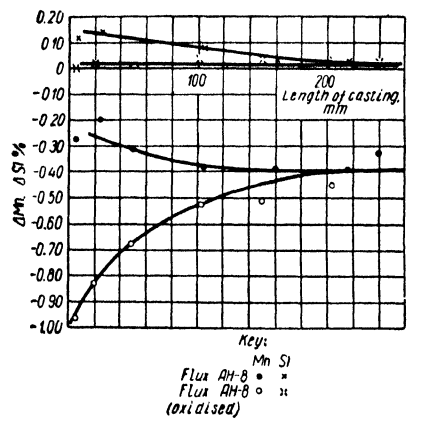

Fig. 59. Variations in recovery of manganese and silicon with length of ingots welded with AH-8 flux and Св-10Г2 wire.

If the electrode wire contains silicon, account must be taken of the reaction between silicon and MnO,

$$[Si]+2\,(MnO)\rightleftarrows 2\,[Mn]+(SiO_2). \quad (5)$$

The reduction of the manganese is intensified as the temperature of the reaction zone decreases. This is why the content of manganese is higher in welding with one Св-10ГС electrode than in welding with two electrodes (see Fig. 58).

If sound welded joints are to be made, it is essential that the chemical analysis of the weld metal be constant throughout its length. To date the best results have been obtained with Св-10Г2 wire used in conjunction with AH-8 flux, in which case the recovery of elements changes little, if at all, although the slag composition may vary within broad limits (Fig. 59).

Table 8 shows the initial chemical composition of AH-8 flux and the final composition of the slag after an ingot 250 mm long was remelted by the electric slag process using Св-10Г2 electrode wire and alternating current.

As is seen from Table 8, the content of MnO in the slag increases due to the oxidation of the manganese of the electrode metal. On

Table 8

Per cent	SiO_2	Al_2O_3	CaO	MgO	MnO	FeO	CaF_2	P
AH-8 flux	32.62	9.4	7.6	7.02	25.3	1.6	15.9	0.038
Slag	29.0	7.0	7.8	5.5	30.6	7.7	12.5	0.0074

the other hand, the content of silica decreases due to the reduction and recovery of the silicon by the weld metal. However, the increase in silicon content in the metal does not make up for the loss of silicon in the slag pool. A greater proportion of silicon goes into the gaseous phase in the form of volatile compounds, such as silicon tetrafluoride. This is also borne out by the considerable decrease in calcium fluoride in the slag.

Mention should be made of the intensive accumulation of iron oxides in the slag pool. This fivefold increase cannot be attributed solely to the reduction of silicon and manganese. As has been found, atmospheric oxygen is also responsible for the phenomenon. When the surface of the slag pool is shielded by, say, argon or nitrogen, the impurities will be oxidised less, and the content of iron oxides in the slag will be sharply reduced (Fig. 60). In some cases this purpose can be served by the "self-shielding" action of the slag pool when it evolves volatile compounds or gases, such as fluorides or carbon monoxide.

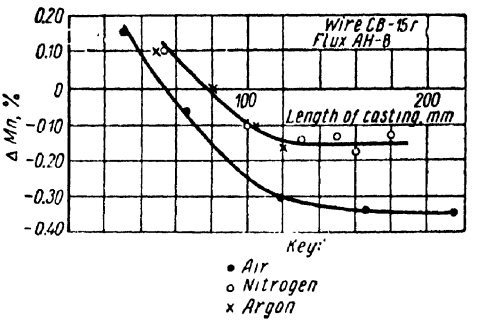

Fig. 60. Effect of gas shielding on manganese content in ingot (Св-15Г wire and AH-8 flux).

The oxygen carriers in the slag pool are the higher oxides of iron forming on its surface and giving up their oxygen in the bottom layers of the slag in contact with the molten metal as shown by the equation

$$(Fe_2O_3) + [Fe] \rightleftarrows 3\,(FeO). \qquad (6)$$

This reaction results in a higher content of lower oxides of iron in the slag.

Oxides of manganese and titanium can also be active carriers of atmospheric oxygen in the metal pool.

It should be noted that the use of what are known as oxygen-free or haloid fluxes may result in the oxidation of the constituent ele-

ments by the oxygen of the air and in the formation of higher oxides of iron, titanium or other elements.

For atmospheric oxygen to be carried by a haloid flux into the metal pool, a small amount of these oxides in the slag will suffice.

Fig. 61 shows changes in the concentration of manganese and silicon in an ingot cast by the electric slag method. The electrode was Св-10ГС wire 3 mm in diameter, and the flux was Grade АНФ-1 of commercially pure calcium fluoride containing up to three per cent SiO_2. The electrode speed was 300 m/hr, and the weld was carried out with 600 a at 25 v a.c.

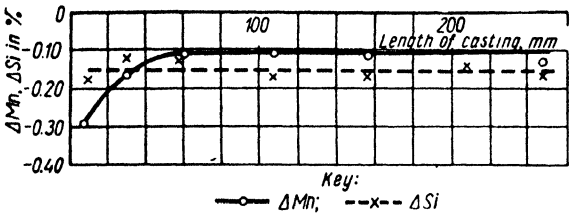

Fig. 61. Oxidation of manganese and silicon in welding with Св-10ГС wire and ВКФ-1 oxygen-free flux (fluorspar).

As will be seen later, hydrogen can also be carried through the slag pool into the molten metal. Thus, complete protection of the metal pool from atmospheric oxygen and hydrogen during electric slag welding or casting calls for the additional shielding of the slag pool.

The course of reactions (3), (4) and (5) depends also on the concentration of manganese and silicon in the electrode metal. The currently employed fluxes bring about an increased oxidation of manganese and silicon as the content of these two elements in the metal pool increases. In turn, the oxidation of the silicon serves to step up the reduction of the manganese of the slag. Figs. 62 and 63 give relevant data on electric slag welding with АН-8 flux. The electrode wire was chosen so as to obtain an increasing concentration of manganese in the absence of silicon (Св-10Г2, Св-08А, and Св-08ГА) and an increasing concentration of silicon with the constant manganese content (Св-08ГА, special experimental wire, and Св-10ГС). Welding was done with alternating current under the conditions specified above (Fig. 57).

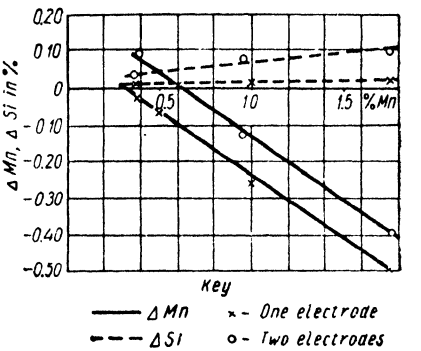

Fig. 62. Recovery of manganese and silicon from АН-8 flux by deposited metal as a function of manganese content in electrode wire.

Referring to Fig. 62, the oxidation of manganese grows in proportion to its content in the wire, but decreases when two electrodes are employed.

The oxidation of silicon and the reduction of manganese at the expense of silicon (Fig. 63) also becomes more pronounced as the concentration of silicon in the wire goes up. This is true of welding with both one and two electrodes.

The parent metal reacts little with the slag, as the interface area is limited. Therefore, reactions that do take place may be ignored.

The quoted quantitative data on the recovery of silicon and manganese due to the reactions of the electrode metal for different grades of electrode wire and AH-8 flux may serve as a basis on which to calculate the chemical analysis of the weld metal for different grades of steel. Such calculation also requires a knowledge of the composition of the parent and electrode metal and of their proportion in the weld metal.

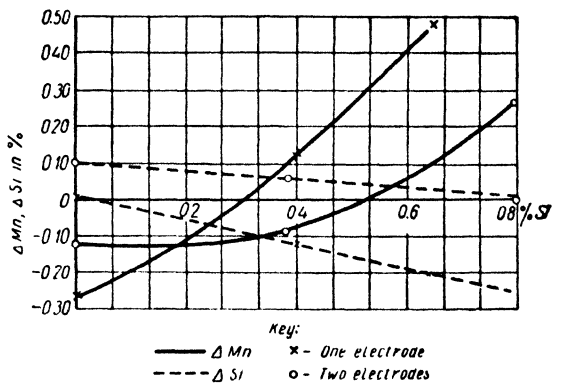

Fig. 63. Recovery of manganese and silicon from AH-8 flux by deposited metal as a function of silicon content in electrode wire.

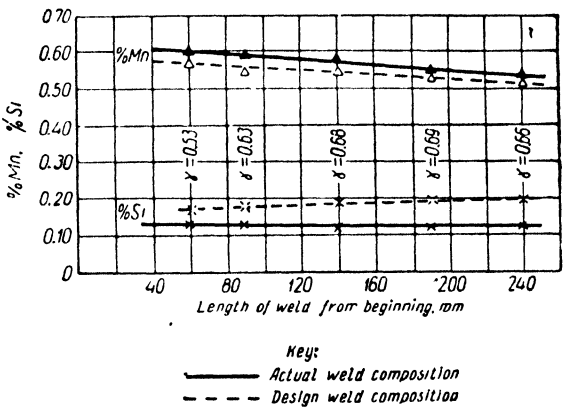

Fig. 64. Comparison of actual and design contents of impurities in weld metal in electric slag welding with Св-08А wire.

The concentration of an element in the weld metal can be found by the equation

$$[M]_w = \gamma [M]_p + (1 - \gamma) [M_e + \Delta M_e], \quad (7)$$

where ΔM_e is the recovered amount of the element as found from the charts in Figs. 51-65 for a given electrode metal.

Figs. 64 and 65 show the actual and calculated manganese and silicon contents of weld metals as found by equation (7).

Good agreement of the empirical and calculated figures proves that the chemical analysis of the weld metal in electric slag welding can be predicted with sufficient accuracy.

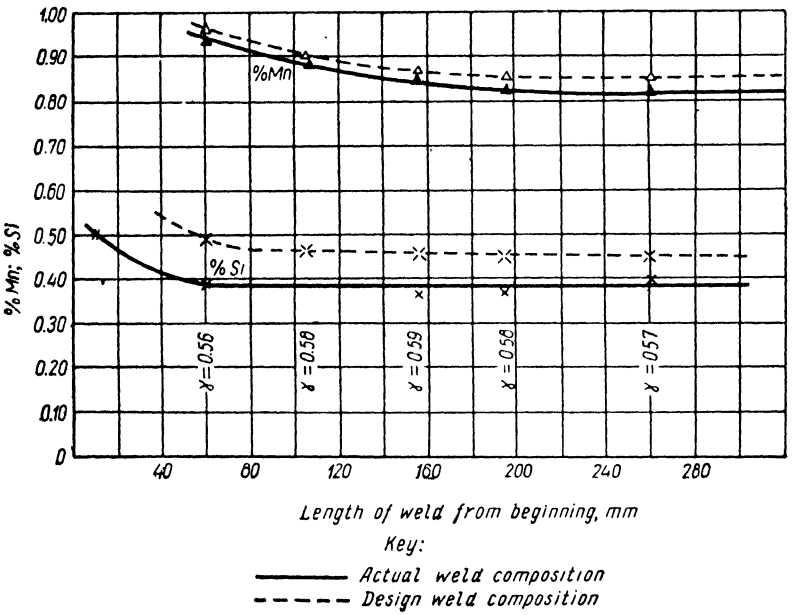

Fig. 65. Comparison of actual and design contents of impurities in weld metal in electric slag welding with Св-10ГС wire.

Referring to the curves in Figs. 61-63, the chemical composition of the weld metal changes most sharply at the beginning of welds 100 to 150 mm long, where the molten metal reacts with fresh slag.

Table 9

Wire grade \ Recovered amount, Mn and Si	One electrode per 90-120 mm thickness		Two electrodes per 90-120 mm thickness	
	ΔMn	ΔSi	ΔMn	ΔSi
Св-08	*	*	+0.1	*
Св-08Г, Св-15Г	−0.2	*	−0.1	+0.1
Св-10Г2	−0.5	*	−0.4	+0.1
Св-10ГС	+0.5	−0.2	+0.2	*

* The actual content of this element is practically equal to the design one, i.e., ΔMn and ΔSi are zero.

As the weld progresses, the amount of elements recovered by the weld metal becomes constant under the prevailing conditions of electric slag welding. The reason is that the initial volume of slag has already reacted with the molten metal, while the slag pool is replenished with small batches of fresh flux.

Table 9 gives approximate data on the recovery of elements in electric slag welding.

The curves in Figs. 61-63 may also be used to calculate the composition of the weld metal.

It should be noted that changes in the welding conditions have a definite effect on the recovery of elements. Therefore, the design data should be adjusted in the light of the considerations that are set forth below.

2. Reactions of Chromium

In building up worn surfaces by the electric slag process, use is often made of sintered rods so as to obtain a high content of alloying elements, such as chromium, tungsten, vanadium, titanium, etc., in the deposit.

When Grade X12 high-chromium steel is hard-faced, the chromium reaction is the most important.

When hard-facing is carried out with silicate fluxes, chromium is oxidised mainly as follows

$$2[Cr]+(SiO_2) \rightleftarrows 2(CrO)+[Si]; \quad (8)$$

$$[Cr]+(MnO) \rightleftarrows (CrO)+[Mn]; \quad (9)$$

$$[Cr]+(FeO) \rightleftarrows (CrO)+[Fe]. \quad (10)$$

The rate of these reactions grows considerably as the temperature decreases. That is why less chromium is oxidised in hard-facing by the arc process with heavy current than by the electric slag method (Fig. 66).

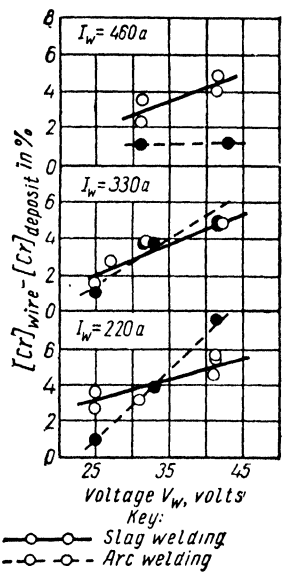

Fig. 66. Oxidation of chromium in submerged arc and electric slag hard-facing.

3. Oxidation of Carbon

In electric slag welding, the carbon may be oxidised by the oxygen contained in the molten steel:

$$[C]+[O]=CO. \quad (11)$$

The carbon may also be oxidised by the oxides contained in the slag

$$[C]+(MnO)=CO+[Mn]; \quad (12)$$

$$2[C]+(SiO_2)=2CO+[Si]; \quad (13)$$

$$[C]+(FeO)=CO+[Fe]. \quad (14)$$

Anywhere from 0.01 to 0.03 per cent of carbon is always oxidised when structural carbon steels are welded with low-carbon electrode wire, the actual amount being in proportion to the concentration of carbon in the wire and the accumulation of iron oxides in the slag.

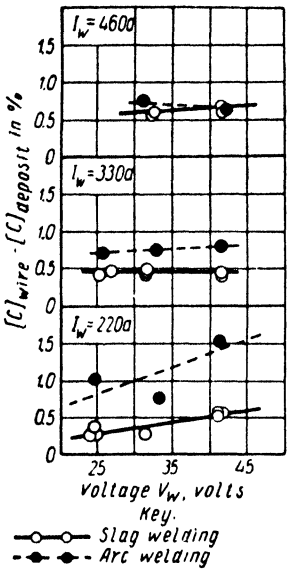

Fig. 67. Oxidation of carbon in hard-facing by electric slag and arc processes.

The quantity of oxidised carbon may reach 0.5 per cent or more when the concentration of carbon in the electrode metal is high, as, for instance, in the welding of cast iron and in hard-facing with sintered rod containing 2 to 3 per cent carbon. In all cases, however, less carbon is oxidised in electric slag welding than in the arc process (Fig. 67), as the involved temperatures are lower.

There is a definite relation between the reactions of carbon and manganese. More specifically, the oxidation of manganese is retarded as the carbon content in the electrode metal rises. This is probably due, on the one hand, to the reducing action of the carbon, and, on the other, to the increased evolution of carbon monoxide which cuts down the amount of atmospheric oxygen admitted to the slag pool.

4. Reactions of Phosphoru. and Sulphur

Phosphorus and, notably, sulphur are harmful impurities in the weld metal. Therefore, in electric slag welding it is essential to reduce their content to a minimum.

However, the temperature conditions of the electric slag process and the materials (fluxes and electrode wire) currently employed are such that the weld or deposited metal contains an amount of phosphorus in all cases of welding and hard-facing. In fact, an amount of phosphorus is added to the metal pool, even if the fluxes employed are manganese-based. No additional phosphorus is transferred to the metal pool when haloid fluxes are used.

Fig. 68 shows the concentration of phosphorus plotted against the length of an ingot (or a welded joint) for AH-8 and AH-22 fluxes. The phosphorus content at the beginning of the weld may be nearly twice its content in the electrode metal.

Phosphorus is introduced into the slag mainly as an impurity of manganese ore. Therefore, with less MnO in the slag, less phos-

phorus will be recovered by the weld metal (see the curve for AH-22 flux in Fig. 68).

An increased quantity of phosphorus is carried from the slag into the metal pool only at the beginning of the weld and where the weld is picked up after it has been interrupted for one reason or another.

Sulphur in the welded joints made in carbon steels is more dangerous than phosphorus, as it gives rise to hot (crystallisation) cracks. When manganese fluxes (AH-8, AH-22 or ФЦ-7) and standard electrode wire are employed. no desulphurisation of the metal pool is accomplished during electric slag welding. On the other hand, no appreciable amount of sulphur goes from the slag into the weld metal.

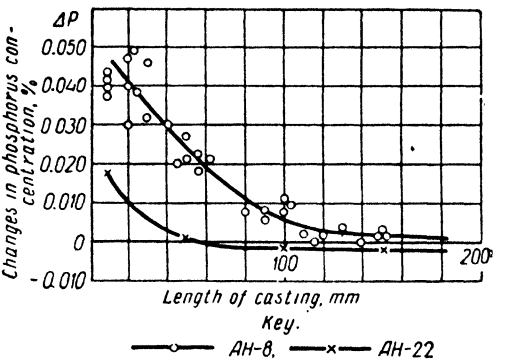

Fig. 68. Variations in recovery of phosphorus by deposited metal from slag with length of ingots.

Desulphurisation is particularly important when carbon steels and, especially, cast iron are welded by the electric slag process.

Until quite recently we had no efficient method of reducing sulphur content in the weld pool either in submerged arc or in electric slag welding. On the other hand, the iron and steel industry has for many years been treating molten metal with calciferous fluxes, i.e., fluxes containing CaO, in order to reduce the sulphur content.

More recently, fluxes based on CaO and CaF_2 have come into use for the purpose in the iron and steel industry.

Table 10

Filler metal	Flux	Sulphur content, per cent		ΔS, per cent
		in filler metal	in weld metal	
Steel 40	AH-8	0.022	0.021	—0.001
	ЭС-5 (80% CaF_2; 20% CaO)	0.030	0.004	—0.026
Gray iron	AH-8	0.114	0.091	—0.023
	ЭС-5 (80% CaF_2; 20% CaO)	0.150	0.047	—0.103

Note: The filler metal has the same chemical analysis as the metal welded.

When employed in electric slag welding, these fluxes readily withdraw sulphur from the weld metal (see Table 10).

The composition of these fluxes is approximately 60 to 85 per cent CaF_2 and 15 to 40 per cent CaO. Use is also made in the iron and steel industry of the CaF_2-Al_2O_3 and CaF_2-CaO-Al_2O_3 systems. Incidentally, the so-called basic electrodes have coatings made of CaF_2-CaO.

Desulphurisation of the metal pool in electric slag welding and casting of high-alloy steels is discussed in greater detail elsewhere in this book.

Experiments have shown that much of the sulphur present in the metal pool can be removed by using a CaF_2-CaO slag and by deoxidising it with carbon, the carbon being in the form of a graphite electrode or coal sprayed on the surface of the slag pool, when a metal electrode is employed.

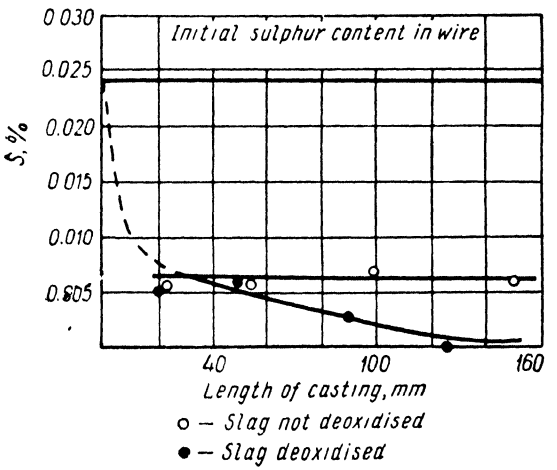

Fig. 69. Sulphur content variations in deposited metal in electric slag welding with flux containing 70 per cent CaF_2 and 30 per cent CaO, with and without deoxidation of slag pool surface.

Fig. 69 shows the changes in sulphur content in ingots with and without the deoxidation of the slag.

The proportion of carbon carried from the electrode metal into the weld pool when low-carbon steels are welded with the deoxidation of the slag is, on the whole, insignificant (from 0.02 to 0.03 per cent) and may be taken care of when selecting the grade of electrode.

This technique may also be employed in the repair of the cope sides of castings, in resistance slag welding, in welding with plate electrodes, and some other cases. The deoxidation of the slag also limits oxidation of the manganese and silicon of the electrode metal, as the slag has a lower content of FeO.

5. Effect of Welding Conditions on the Rate of Metallurgical Reactions

When electric slag welding proceeds steadily, the electrode metal is transferred into the weld pool in drops. With other conditions being equal, the temperature of the reaction zone and the conditions under which the drops of metal come in contact with the slag (speed of drop transfer, surface area of drops, path, etc.) are governed by the weld-

ing conditions (value of current and voltage, depth of the slag pool, weaving motion of the electrode, etc.).

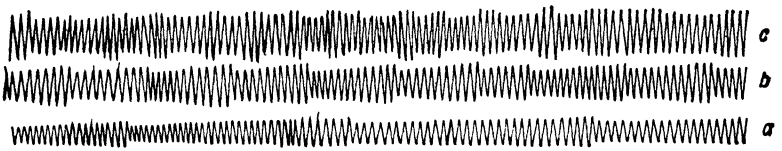

Fig. 70. Current oscillograms in electric slag welding:
a—drop transfer at welding speed of 70 m/hr (250 a); *b*—ditto, at 155 m/hr (400 a); c—ditto, at 300 m/hr (600 a).

Oscillographic studies of the drop transfer of metal and the recovery of alloying elements and impurities have thrown light on how the various factors influence the course of metallurgical reactions.

Table 11

Metal transfer factors	Electrode speed, m/hr, at 44 v welding voltage			Welding voltage v at electrode speed of 155 m/hr		
	78	155	300	32	44	56
Number of drops per sec	1.67	5.0	9.0	4.27	5.0	9.0
Average weight of drop, grams . . .	0.71	0.47	0.51	0.55	0.47	0.26
Average diameter of drop, mm . . .	5.6	4.9	5.0	5.2	4.91	4.0

Fig. 70 gives current oscillograms for electric slag welding carried out with a transformer having a straight-line volt-ampere curve. The electrode was Св-10Г2 wire 3 mm in diameter, mounted in the centre of a round chill 50 mm in diameter. The welding voltage was 44-46 v, and the slag pool was 50 mm deep. The flux used was АН-8. The electrode wire was fed at the rates of 78, 155 and 300 m/hr. The oscillograms clearly show the current peaks corresponding to the instants when a drop of metal was about to break away from the electrode tip.

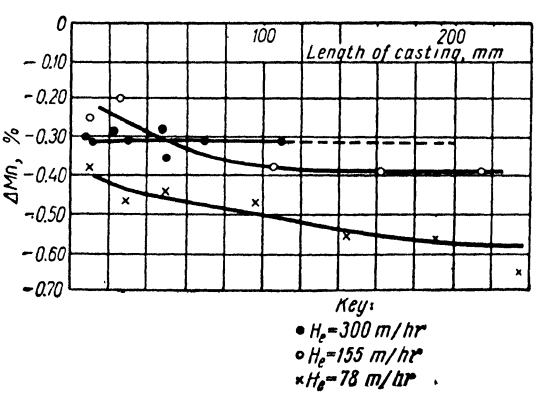

Fig. 71. Oxidation of manganese plotted against welding speed.

As can be seen from the oscillograms, more and more drops break

away from the electrode tip per unit time as the current (electrode speed) rises. Table 11 summarises the oscillographic data.

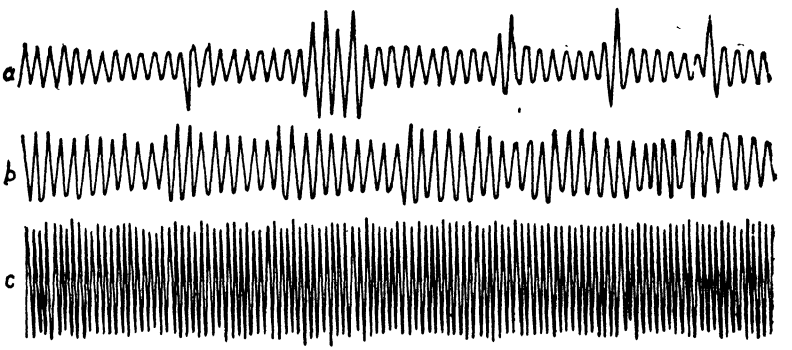

Fig. 72. Current oscillograms in electric slag welding
a—drop transfer at welding voltage of 31-32 v; b—ditto, at 44-46 v; c—ditto, at 55-56 v.

As the current rises, though the size of the drops remains about the same, the time of contact with the slag grows considerably shorter. Therefore, the rate of the reactions should be expected to slow down as the electrode speed is increased.

Fig. 71 shows the recovery of manganese in the above-mentioned cases plotted against the current (electrode speed). As will be seen, the oxidation of manganese becomes less intensive as the welding current (or electrode speed) is increased. An increase in the welding voltage yields opposite results.

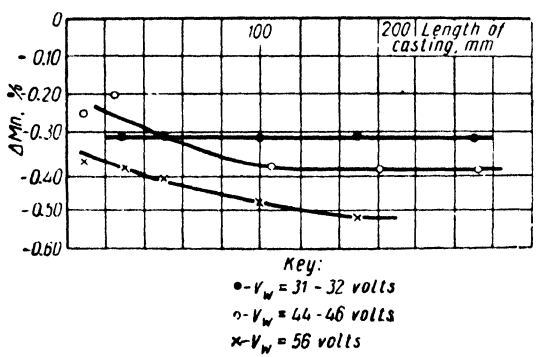

Fig. 73. Oxidation of manganese plotted against welding voltage.

Fig. 72 gives current oscillograms for three values of the welding voltage: 31-32 v; 44-46 v; and 55-56 v; while Table 11 summarises the oscillographic data.

As can be seen from the oscillograms and the table, the size of drops is reduced as the welding voltage rises. On the other hand, the time of contact with the slag is increased, as the distance between the electrode tip and the weld pool increases. These two

factors tend to add more manganese to the slag (Fig. 73). A decrease in the depth of the slag pool has an effect similar to an increase in the welding voltage.

6. Effect of Type of Current and Polarity on Metallurgical Reactions

So far the metallurgical processes occurring in electric slag welding have been examined in the light of the molecular structure of the slag. As has been noted, electric slag welding depends on the passage of an electric current through molten slag. But the passage of current through slag may bring about its electrolysis—a phenomenon manifested most in direct current welding.

If the phenomena observed in electric slag welding are to be viewed in a true perspective, they must be approached from the angle of the contemporary concepts of the ion structure of metallurgical slags.

From the view-point of the modern ion theory, molten slag consists of positively and negatively charged ions. The positively charged ions (or cations) in welding slags are ionised atoms of metals: Ca^{2+}, Mg^{2+}, Fe^{2+}, Mn^{2+}, etc. However, some metals may be included in composite negatively charged ions (anions), such as FeO_2^-.

The simplest anions in a slag may be fluorine F^-, sulphur S^{2-} and oxygen O^{2-}, the last-named being in anion form only when the concentration of elements capable of forming composite ions (Si, Al, P, Fe and some others) is negligible. Free anions O^{2-} are only present in basic fluxes.

Silicate welding slags also have present silicon-oxygen anions of the $Si_xO_y^{z-}$ type, that are more or less complex, depending on the number of oxygen atoms per silicon atom. Composite silicon-oxygen anions reach the limit of dispersion in the orthosilicate anion SiO_4^{4-}. Though of the smallest possible size, this anion has the largest specific charge (per silicon atom), which fact accounts for the strong bonds it has in various compounds.

When direct current is passed through the slag, it is electrolysed, and the constituent elements are deposited on the electrodes.

Thus, iron and manganese are deposited on the cathode

$$Fe^{2+} + 2\ominus = 2Fe; \quad (15)$$

$$Mn^{2+} + 2\ominus = 2Mn. \quad (16)$$

Gases may also be given out at the electrodes as a result of the reaction

$$F^- - \ominus = F. \quad (17)$$

The silicon-oxygen anion approaching the electrode will discharge as follows:

$$SiO_4^{4-} - 4\ominus = SiO_2 + O_2. \quad (18)$$

As a result, the slag at the anode is enriched with silica, and oxygen is evolved at the anode to react violently with the electrode metal.

The above-mentioned reactions have a strong effect on the metallurgical reactions in electric slag welding. Figs. 74*a*, *b*, and *c* show the recovery of manganese in electric slag welding with direct current (of straight and reversed polarity) and with alternating current, using various electrode wire (Св-08А, Св-10Г2 and Св-10Г7). The flux was АН-8 in all cases.

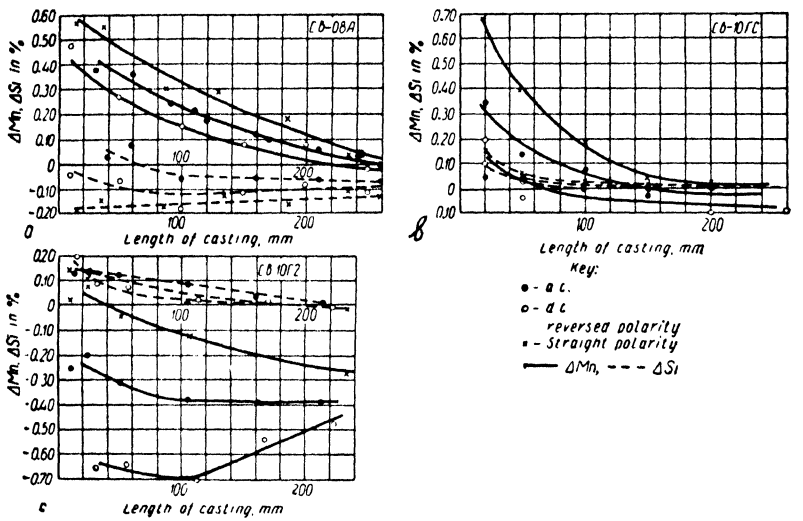

Fig. 74. Comparison of manganese and silicon recovery by deposited metal in welding with a. c. and d. c. and АН-8 flux:
a—Св-08А wire; *b*—Св-10ГС wire; *c*—Св-10Г2 wire

In the case of reversed polarity (the electrode is connected to the positive terminal), more manganese is oxidised and transferred into the slag than in the case of straight polarity (the electrode is negative). This phenomenon can be explained as follows.

When polarity is reversed, and the electrode serves as an anode, more oxygen is supplied due to electrolysis to the surface of the metal drop at the electrode tip and the oxygen reacts violently with the electrode metal. Thus, the best possible conditions are created for oxygen to act upon the most developed surface area of molten metal in drops, and the elements, such as manganese and carbon, are oxidised to a greater degree.

When polarity is straight, and the electrode serves as a cathode, the ions of manganese present in the slag concentrate around the drops, inhibiting the oxidation and transfer of manganese from the

drops of electrode metal into the slag. Should any chromium be present in the electrode metal, its transfer into the slag will be facilitated, since favourable conditions are created for such reactions as

$$Cr + Mn^{2+} \rightleftarrows Cr^{2+} + Mn;$$
$$2Cr + Si^{4+} \rightleftarrows 2Cr^{2+} + Si.$$

Oxygen in this case is supplied to the surface of the metal pool which serves as an anode. As the specific surface area of the metal pool (i. e., the area per unit weight of molten metal) is much less than the specific surface area of the drops of electrode metal, there is much less possibility for the elements, such as carbon and manganese, to be oxidised, as in the case of reversed polarity (Table 12).

Table 12

Welding current I_w, a	Welding voltage V_w, v	Depth of pool, mm	Polarity	Carbon loss, per cent	Chromium loss, per cent
210-230	30-32	41	Reversed	0.28	1.7
210-230	30-32	43	Straight	0.03	3.2

Note: Flux, Grade AH-8; sintered electrode wire, 1.95 per cent C; 0.33 per cent Si; 1.4 per cent Mn; and 14.5 per cent Cr.

It should be noted that the above-mentioned elements may be oxidised to a greater degree on straight than on reversed polarity or in welding with alternating current, if the volume of the metal pool is sharply reduced to a point where its specific surface area becomes comparable with that of the metal drops and there is ample supply of oxygen to the slightly superheated surface of the molten metal. This may happen when welding is performed with low values of current and voltage.

In welding with alternating current, the amount of manganese transmitted into the slag is in between the quantities observed in welding with direct current of straight and reversed polarity.

The behaviour of silicon is more complicated than that of manganese. This element may be present in welding slags as anions $Si_xO_y^{z-}$. The anolyte will be enriched with silica, which will inhibit the oxidation of the silicon.

The difference in the oxidation of the elements in welding with direct and alternating current should be attributed not only to the electrolysis of the slag, but also to changes in the drop transfer of electrode metal.

Fig. 75 shows oscillograms for electric slag welding with alternating and direct current of straight and reversed polarity, using three

values of current: 250, 400 and 600 a and the respective electrode speeds: 78, 155 and 300 m/hr. The electrode was wire 3 mm in diameter; the flux, Grade AH-8; and the welding voltage, 44-46 v. Table 13 summarises the oscillographic data. They seem to prove that the size of drops is much greater in welding with direct current of straight polarity than of reversed polarity.

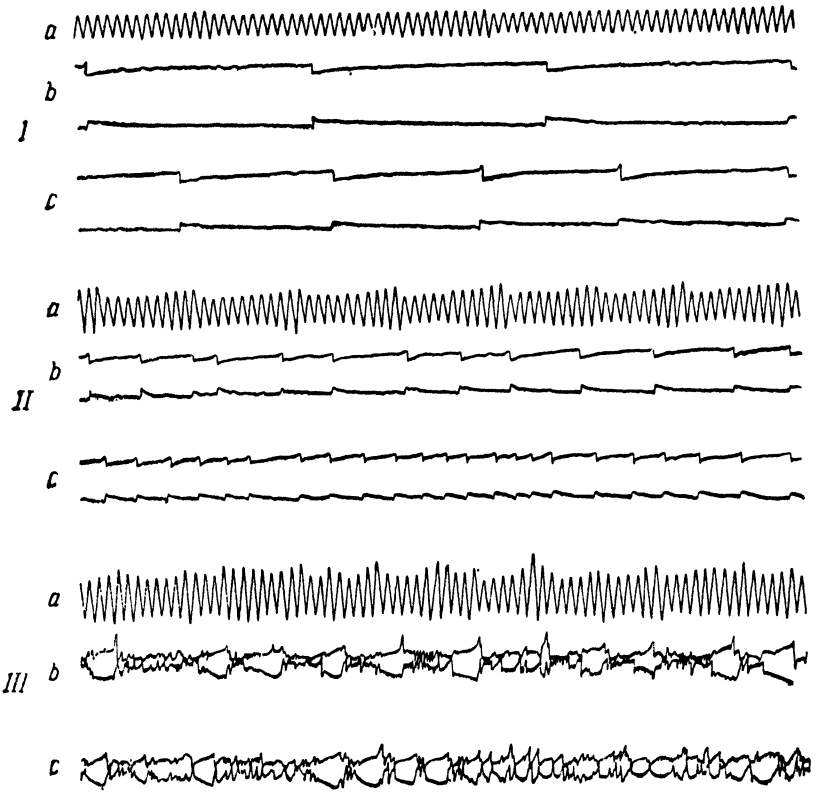

Fig. 75. Wave forms of electric slag welding with a. c. and d. c.: *I*—78 m/hr; *II*—155 m/hr; *III*—350 m/hr; *a*—a. c.; *b*—d. c., straight polarity; *c*—ditto, reversed polarity.

The drops are largest when welding is performed with alternating current. This may be attributed to changes in the electrodynamic forces acting on the drop and in the temperature conditions in the melting zone of electrodes.

To sum up, both electrolysis and drop transfer of metal should be taken into account in an analysis of electric slag welding with direct current.

Table 13

Factors of drop transfer	Alternating current			Direct current					
				straight polarity			reversed polarity		
	Electrode speed, m hr								
	78	155	300	78	155	300	78	155	300
Number of drops transferred per sec	1.67	5.0	9.0	2.0	8.3	17.0	3.2	14.8	26.0
Average weight of drop, grams	0.71	0.47	0.51	0.60	0.29	0.27	0.37	0.16	0.18
Average diameter of drop, mm	5.6	4.9	5.0	5.3	4.1	4.0	4.5	3.4	3.5

7. Behaviour of Gases in Electric Slag Welding

The evolution of gases from the metal pool during solidification may leave voids in the weld. Of all the gases that may produce holes and blows, hydrogen and nitrogen are less dangerous in electric slag welding than in submerged arc welding. The reason is that in the former case the conditions for their evolution from the metal pool are most favourable, because grain growth in vertical joints is oriented. The main cause of holes and blows in electric slag welding is the evolution of carbon monoxide.

At the solidifying point of steel, the greatest affinity for oxygen is shown by titanium, aluminium, silicon and carbon, in the order given. An addition of manganese enhances the deoxidising effect of silicon. If the metal pool contains aluminium or a sufficient amount of silicon and manganese, the oxygen will combine with these deoxidising elements. In this way the very possibility of gaseous carbon monoxide forming in the solidifying metal will be prevented, and no holes or blows will develop in the weld.

If the deposited metal contains little, if any, deoxidising elements, carbon monoxide will be formed during solidification and the weld may have gas defects (Fig. 76).

In electric slag welding, gas defects can be prevented by maintaining a high content of deoxidising elements (silicon, aluminium, etc.) in the weld metal. Deoxidisers may be introduced into the weld both with electrodes and with the parent metal by increasing the share of the parent metal in the weld metal, provided its content of deoxidising elements is high enough.

As the oxidising ability of the slag increases or, which is the same, a greater amount of higher oxides of iron and manganese are accumulated in the slag, more carbon is oxidised, and the danger of cavities forming in the weld increases. A sharp increase in the content of

iron oxide in the slag pool may result from an appreciable amount of scale or rust falling off the edges of the workpiece into the slag pool.

Hydrogen in electric slag welding has time to leave the metal pool before solidification and is therefore less dangerous from the view-point of defect formation. However, gas defects in the form of long pipes (Fig. 76*a*) may form in the weld if much moisture finds its way into the slag pool or the water-cooled moulding shoes or backing strips are leaky.

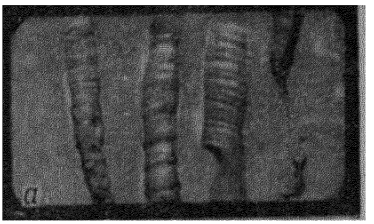

Experience has shown that the slag pool, however deep, provides no shielding against hydrogen of the air. Hydrogen easily goes through the slag pool and into the molten metal, and under certain conditions its concentration may be fairly high. In some cases, therefore, the workpiece (a weldment or a casting) of titanium and special alloys has to be shielded by argon or any other inert gas.

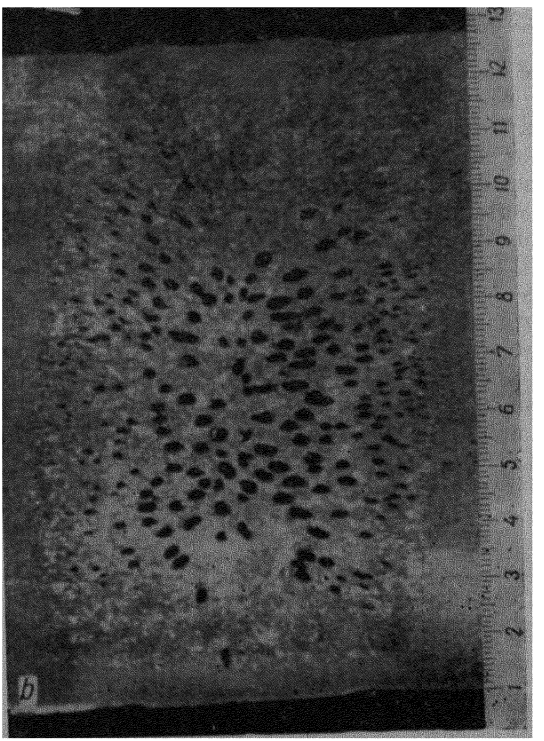

Fig. 76 Gas pockets in electric slag weld:
a due to moisture in welding area (cavities caused by hydrogen) *b* rimmed steel welded with Св-08А wire (cavities caused by carbon monoxide).

Fig. 77 shows hydrogen concentration plotted against the length of steel X25H20 ingots cast by the electric slag process with alternating current and АН-8 flux.

The ingot *a* was cast under a shielding of commercially pure argon; the ingot *b* was cast in conditions of natural contact between the slag pool and the air; and the shielding for the ingot *c* was provided by a jet of saturated steam.

It should be noted that when electric slag welding is performed with direct current, hydrogen concentration in the molten metal may go down due to electrolysis of the slag pool.

Fig. 78 shows hydrogen concentration in steel X25H20 ingots cast by the electric slag process with alternating and direct current of straight and reversed polarity using AH-8 flux (the other conditions as specified above). As can be seen, hydrogen concentration is higher in casting with alternating than with direct current. Hydrogen is best removed on straight polarity (the electrode is negative). This is further evidence that in molten metal hydrogen is present in the form of protons.

Electrolytic removal of hydrogen from the metal pool is most efficient with large electrodes or with carbon (or other non-consuma-

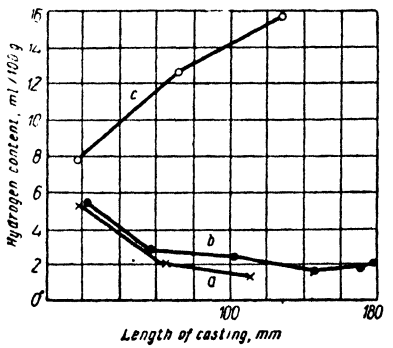

Fig. 77. Variations in hydrogen content in ingots of steel X25H20 cast by electric slag process with a. c.:

a—with argon shielding around slag pool; *b*—without shielding (natural contact between slag and air); *c*—slag pool blown with saturated steam.

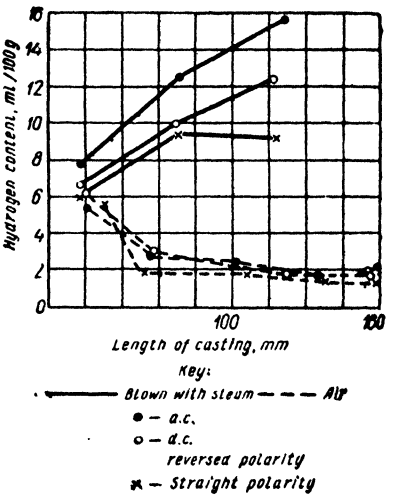

Fig. 78. Variations in hydrogen content in ingots of steel X25H20 cast by electric slag process with d. c. and a. c.

ble) electrodes. Supplemented by the shielding of the slag pool, this technique may reduce to a minimum the hydrogen content in the weld metal.

There is lack of experimental data on the behaviour of oxygen and nitrogen under the conditions of electric slag welding, and a special investigation will have to be made into this problem.

8. Fluxes for Electric Slag Welding

Besides maintaining the metallurgical reactions in the desired direction, fluxes for electric slag welding should also produce a dense deposit of metal. They should likewise meet a number of special

requirements arising from welding procedures and have sufficient electrical conductivity.

The properties of a flux have a direct bearing on the course of electric slag welding. As experience shows, while with some fluxes it is easy to establish and maintain the welding process, with other fluxes it is not so.

The fluxes employed in electric slag welding should meet the following requirements determined by welding procedures:

(1) The flux should be such that the optimal conditions of electric slag welding are attained quickly and maintained easily against considerable variations in the depth and width of the slag pool and over a wide range of voltages and welding currents.

(2) The flux should ensure a sufficient penetration and a satisfactory moulding of the weld surface without undercuts or overlaps, against appreciable variations in the depth and width of the slag pool and over a sufficiently wide range of welding conditions.

(3) The flux should not run out through the gaps which may be left between the edges of the workpiece and the moulding shoes due to fit-ups as performed under usual shop conditions, nor should it pry the moulding shoes away from the edges.

(4) The slag crust should crack off easily. Slag flakes should not spring off the weld.

Another important practical consideration is that a flux requires no scarce or hard-to-get materials, and also be fused in the available flux-fusing furnaces.

Changes in the electrical conductivity and viscosity of a flux with temperature bear directly on the above-stated properties of the flux.

Increased electrical conductivity promotes the attainment and maintenance of the desired welding conditions. Electrical conductivity affects to a great extent the amount of heat liberated in the fusion zone and, consequently, the melting rate of the electrode metal and penetration.

The viscosity of a slag under normal welding conditions, when use is made of moulding shoes or backing strips, should lie within certain limits. If the slag is too fluid, it will run out through the gaps between the workpiece and the moulding shoes, the slag pool will become shallow, and the entire welding process will be upset. Conversely, if the slag is too viscous, refractory or short, it will pry the moulding shoes away from the workpiece, and the edges will be undercut. In some cases, such as in welding with a plate electrode "in a pocket", in chill-casting, or in resistance slag welding, the slag should be as fluid and as "long" as possible, so that the weld can be easily shaped and contain no slag inclusions.

From the view-point of safety, it is essential that the slag come off easily from the deposit. If the slag sticks fast to the surface of the deposited metal, it may break away and scatter around in cooling

and its fragments may injure the eyes and skin of the operators. The adhesion of silicate slags to the surface of the deposited metal is to a great measure governed by the content of oxides capable of "building up" the oxide film. These, above all, are Al_2O_3, Cr_2O_3 and some others. Therefore, it is essential to reduce the content of these oxides to a minimum, if the slag crust is to come off easily.

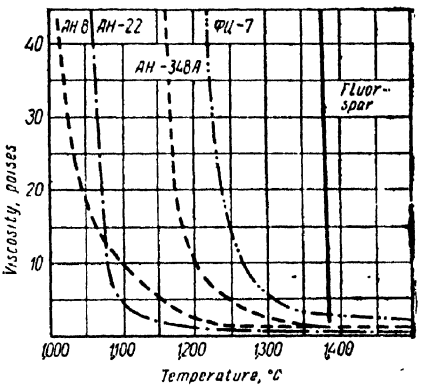

Fig. 79. Variations in viscosity of existing flux grades with temperature.

The required welding and electrical properties of a slag are obtained by the introduction of appropriate additions. As has been found, electric slag welding proceeds more steadily when the content of SiO_2 in the flux is reduced and that of MnO increased. The electrical conductivity of the slag (and, consequently, the stability of electric slag welding) is best improved by calcium fluoride and other fluorides and titanium oxides. However, they reduce the viscosity of slags, too.

As there is lack of information as to how the temperature of such composite systems affects their electrical conductivity and viscosity, the optimal formulations of slags are obtained by trial and error.

The composite fluxes most commonly used in the Soviet Union nowadays are АН-8, АН-8М, ФЦ-7, АН-348А, АН-22, and АНФ-1. Use is also made of fluxes based on CaO and CaF_2, oxidised fluxes of the АН-8 type, and the АН-25, a special-purpose flux of high electrical conductivity in the solid state. This flux contains titanium oxides and shows electron conductivity.

The chemical compositions of these fluxes are given in Table 14.

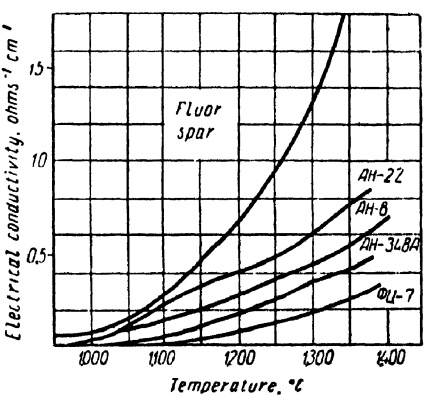

Fig. 80. Variations in electrical conductivity of existing flux grades with temperature.

As experience has shown, the most suitable fluxes for the moulded welding of long joints in structural carbon steels are АН-8, АН-8М and

Table 14

Flux grade	Chemical composition of fluxes, per cent										
	SiO_2	Al_2O_3	MnO	CaO	MgO	Na_2O, K_2O	FeO	CaF_2	S	P	Others
АН-8	33-36	11-15	21-26	4-7	5-7	—	Up to 1.5	13-19	Up to 0.15	Up to 0.15	
АН-8М	35-38	Up to 5.5	28-32	4-8	Up to 1.0	3.0-4.0	Up to 1.5	12-16	Up to 0.15	Up to 0.15	
АН-22	18-21.5	19-23	7-9	12-15	11.5-15	1.3-1.7	Up to 1.0	20-24	Up to 0.05	Up to 0.05	
ФЦ-7	46-48	Up to 3	24-26	Up to 3	16-18	0.6-0.8	Up to 1.5	5-6	Up to 0.15	Up to 0.10	
АН-25	6-9	—	—	12-15	2-4	—	—	33-40	Up to 0.10	—	TiO_2, 30-40
АНФ-1	Up to 5	—	—	—	—	—	—	Min 92	Up to 0.10	—	
АНФ-7*	—	—	—	20	—	—	—	80	—	—	
АНФ-6*	—	35	—	—	—	—	—	65	—	—	
48-ОФ-6	Max 4	20-27	0.3	16-23	3.0	—	Up to 1.5	45-60	Up to 0.05	Up to 0.04	

* Charge composition.

АН-22. Fluxes ФЦ-7 and АН-348А are similar in welding properties (Figs. 79 and 80): viscosity and electrical conductivity. However, АН-348А is inferior to ФЦ-7, as the welding process with it is less stable when electrode speed is high and the slag pool shallow.

When the electric slag process is employed for ingot repair or casting carbon and alloy steels, the best fluxes are those based on CaF_2, CaO and Al_2O_3 (ЭС-4, ЭС-5, 48-ОФ-6 and АНФ-1). As they have a beneficial effect on the metallurgical reactions, these fluxes hold out great promise for welding high-carbon and high-alloy steels and cast iron with plate electrodes.

The resistance slag process where the slag should be as less viscous as possible employs the АНФ-1 flux, which is commercially pure calcium fluorate.

In welding with plate electrodes, with consumable electrode guides, in resistance slag welding, in ingot repair and casting, the welding process can be best of all initiated with the АН-25 flux which shows electrical conductivity at room temperature.

9. Electrodes for Electric Slag Welding

In most cases, electric slag welding and hard-facing are performed with electrode wire 3 mm in diameter. Sometimes, however, when conventional rather than special welding equipment is employed, the diameter may be 2 mm for portable semi-automatic welding machines, and 4 to 6 mm for welding heads or tractor-type welders.

Carbon steels are welded with electrode wire to U.S.S.R. State Standard (ГОСТ 2246-54) (Table 15).

Table 15

Wire classification under ГОСТ 2246-54	Percentage content				
	Carbon	Manganese	Silicon	Sulphur	Phosphor
			max		
Св-08ГА	max 0.10	0.8-1.1	0.03	0.03	0.03
Св-15Г	0.11-0.18	0.8-1.1	0.03	0.04	0.04
Св-10Г2	max 0.12	1.5-1.9	0.03	0.04	0.04

Carbon electrode wire contains, as a rule, less carbon than the structural steels welded with them. Therefore, the strength of the weld metal which must be at least comparable with that of the parent metal has to be improved by alloying the weld metal with manganese, silicon or other elements. This technique is convenient, simple and widely applied in the electric slag welding of structural steels containing up to 0.3 or 0.35 per cent carbon. As a rough guide, Table 16 suggests the grades of electrode wire for the electric slag

welding of some carbon and low-alloy structural steels with AH-8, AH-8M or ФЦ-7 flux.

Table 16

Steel	Steel Grade	Rod Grade
Structural, low-carbon	Ст. 2; Ст. 3, Мст. 3	Св-08А; Св-08ГА; Св 10ГС; Св-10Г2
Boiler	20К, 22К	Св-10Г2
Medium-carbon, cast . .	20Л 25Л, 35Л	Св-08ГА; Св-10Г2
Medium-carbon, wrought	Steel 30, Steel 40	Св-08ГА; Св-10Г2
Low alloy, chromansil .	30ХГСА	Св-18ХМА

The use of these wire grades in welding steels with a higher carbon content or steels that are specially heat-treated to improve their strength, will pose additional difficulties in choosing the appropriate heat treatment and other procedures for the joints between dissimilar metals.

Therefore, the best possible case of electric slag welding is when both the weld metal and the parent metal have as similar a composition and mechanical properties as possible. Such a joint is simpler to make and safer to use.

Recently, homogeneous welded joints have been obtained in some structural steels of increased carbon content (0.3 to 0.5 per cent) by means of filler metal (in the form of plates, rods or wire) of the same chemical analysis as the parent metal. As $CaO-CaF_2$-base fluxes actively withdraw sulphur from the weld pool and oxidise manganese and silicon little, it is possible to employ electrodes with the normal content (within the limits specified by the relevant Standards) of sulphur, manganese and silicon.

In some cases, such as the repair of the rise side of ingots and castings with a consumable electrode of heavy cross section, use may be made of waste metal—gates, trimmings, etc.—that has the same composition as the metal of the ingot or casting. The necessary cleansing action is provided by the slag pool.

Hard-facing, which requires an appreciable amount of alloying of the deposited metal, can be performed with sintered rods.

Special mention should be made of the new prospects opened up by the electric slag process for alloying the weld or deposited metal.

A large and well stirred pool of molten metal which solidifies at a relatively slow rate makes it possible sometimes to use several wire and plate electrodes that differ markedly in chemical analysis and to obtain a deposit of an averaged composition. Another important advantage is that a wide range of compositions of weld or deposited metal can be obtained by using a relatively small number of standard grades of materials.

Another method of alloying the deposited metal is to feed alloying metal into the slag pool without current being applied. The alloying metal may be either conventional or sintered wire continuously fed by a separate mechanism, or a plate or a rod fed into or positioned stationary relative to the workpiece. In the latter case, the metal will be washed by the rising slag pool.

The alloying metal may also be fed into the slag pool in the form of finely divided mixtures of ferro-alloys or as a suitably prepared charge.

There is particular promise in electric slag welding by heavy-section electrodes sintered from powders of various metals.

The deposited metal thus obtained can be controlled as to chemical analysis and the content of impurities.

Chapter IV

TECHNIQUE OF ELECTRIC SLAG WELDING AND HARD-FACING

1. Types of Joints and Welds

Fig. 81 shows the welded joints made by the electric slag process. In fact, any type of joint encountered in practice may be welded by electric slag process. However, they are not all equally convenient to make, nor are all reliable in service.

The *butt joint* (Fig. 81*a*) is the basic and simplest type of joint. In actual butt joints the edges may have an offset. With the available electric slag welding equipment (moulding shoes and suspensions) for straight seams, the offset may be ± 10 mm over a length of 0.5 m, while the surface may warp up to 1.5 mm over a length of 150 mm. In practice, however, such a marked offset should be avoided, as it hampers the welding and impairs the quality of welds. When drawing up specifications for edge preparation and fit-up, it should be borne in mind that the distortion brought about by the welding heat may increase the offset. In practice, the offset of the edges to be welded should not exceed 2 to 3 mm, or 5 to 6 mm in extreme cases. The warping of the plate should be limited to anywhere between 0.5 and 1 mm over a length of 150 mm.

When the workpiece is not planned to be machined after welding, the rigid moulding shoes of conventional design produce a reinforcement as shown in Fig. 81*a*.

When the surface of the weld is planned to be machined upon welding, the reinforcement should be increased to 10 mm by changing the depth of grooves in the moulding shoes or backing strips.

Butt joints in plates of different thicknesses (Fig. 81*b*). If the difference in the thickness of the edges does not exceed 6 mm, conventional moulding shoes may be employed, provided the inadvertent increase in the offset is not over 2 mm. However, if the difference in plate thickness is anywhere between 6 and 30 mm, use should be made of stepped moulding shoes.

If the difference in thickness is more than 30 mm, the moulding shoes should be of angular construction, and the section of the weld

will be as shown in Fig. 81*c*. Should this shape be inacceptable, the thicker edge should be bevelled (Figs. 81*d* or 81*e*). This technique is convenient for welding, but it requires additional materials and time. Where it is more convenient to machine the finished weld, an equalising strap may be employed, and the weld should be machined as shown in Fig. 81*f*. Fig. 81 shows butt joints with the edges offset to one side. The joint is made in the same manner when the thick and the thin plates are placed with their axes in line.

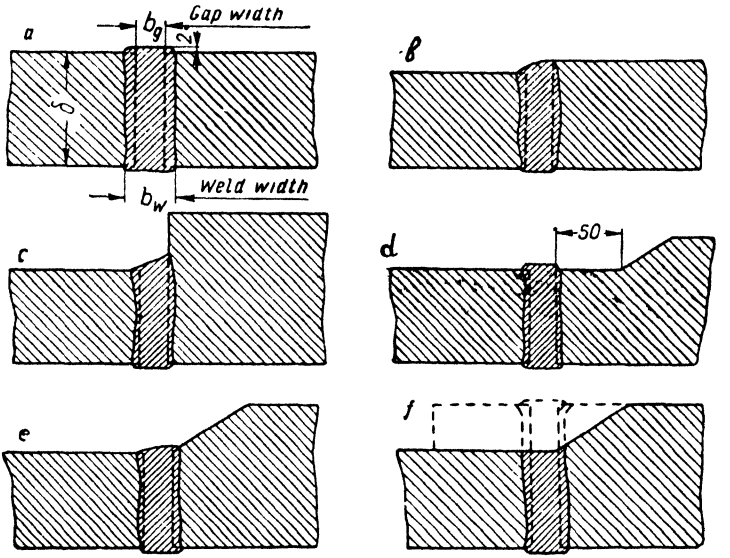

Fig. 81. Types of butt joints.

Corner and Tee joints. The usual slag-welded corner joint is shown in Fig. 82*a*. Its drawback is that the side plate may laminate when poorly rolled. The joint shown in Fig. 82*b* is more reliable, but the edges are more difficult to prepare for welding.

The outside reinforcement of the weld in a corner joint is similar to that in a butt joint (Fig. 82*a*). The inside reinforcement is shown in the same figure. The angle α should not exceed 20°. Should the angle be greater, an overlap may form on the reverse side of the weld (Fig. 83), and thus constitute an area of concentrated stresses.

A Tee joint (Fig. 82*c*) differs from a corner joint in that its both sides are moulded as in a corner joint. Tee joints are as easy to weld as corner joints. A Tee joint with unconstrained side surfaces (Fig. 82*d*) is somewhat more difficult to make than the one previously mentioned, as it requires special electrode carriers and readjustments in the welding apparatus. In case such a joint is 2 or 3 m long, it is advisable to employ a consumable electrode carrier.

Welds with incomplete penetration are employed in Tee joints (Fig. 82*e*) when they are long but small in cross section. Such a weld should have a leg of at least 12 mm but not more than 20 mm long.

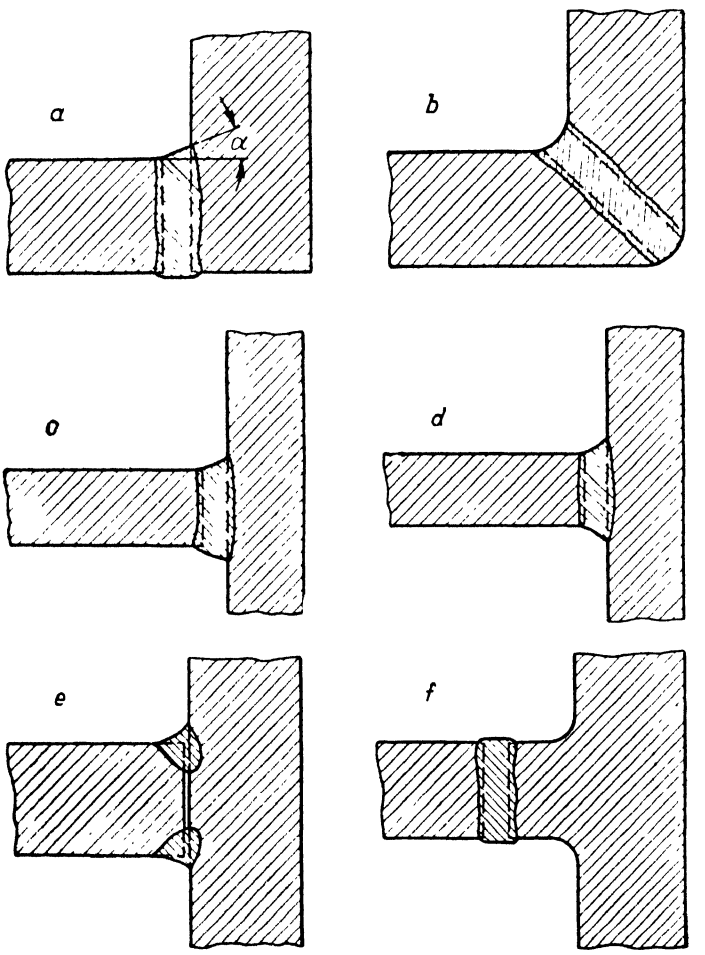

Fig. 82. Types of corner joints.

The welding equipment employed is usually of the walking-magnet type.

In cast-welded structures, Tee joints are replaced as a rule by butt joints with bosses (Fig. 82*f*). Such a joint, besides being more convenient to make, is advantageous in that the metal of the boss is usually of a higher quality than that of the casting itself.

Straight seams are the simplest. They may use all types of joints (Figs. 81 and 82). Currently, the electric slag process is applicable to butt-welded seams of unlimited length in plate up to 600 mm thick or of practically unlimited thicknesses when the length is anywhere from 1 to 1.5 m. Lengths upwards of 1.5 m and thicknesses upwards of 600 mm have not been encountered in practice yet. Plates up to 50 or 70 mm thick can be welded with a single stationary electrode. When a large number of such welds has to be made, the use of special-purpose single-electrode welding machines is warranted. Otherwise, they may be welded with three-electrode machines, using one electrode.

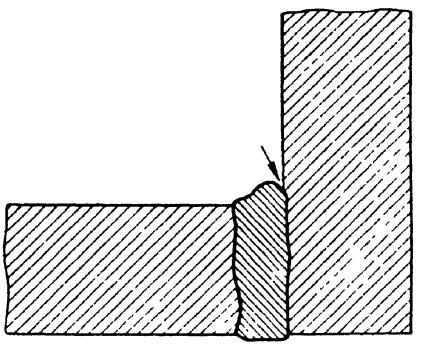

Fig. 83. Overlapping in poorly designed corner joint.

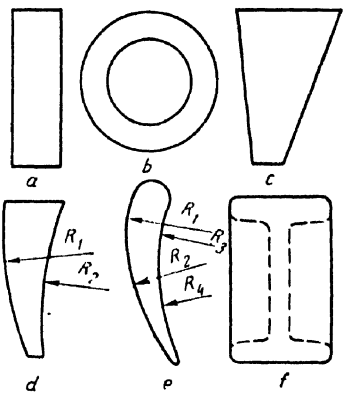

Fig. 84. Longitudinal sections of welds made by the electric slag process.

If the thickness of plate is more than 50 or 60 mm, several stationary electrodes spaced up to 75 mm apart, may be employed. An alternative is a smaller number of electrodes oscillating across the thickness of the plates being welded. With this technique, one electrode per 150 or 200 mm length of weld will suffice.

Usually, not more than three oscillating electrodes are employed, or else the welding machine and control of electrode guides would be prohibitively complicated. Thus, the maximum thickness weldable by this method is up to 600 mm.

When the thickness is over 600 mm but the length is limited the electrodes may be fed into the groove from above. Currently, there are three methods for welding such jobs: with slender electrodes introduced through copper guides; with large-size plate electrodes with the current applied to them outside the groove; and with electrodes of a relatively small size (3 to 6 mm in diameter) introduced through consumable electrode carriers. The three methods only differ in the space that should be provided above and in front of the joint. Welding with a consumable electrode guide is applicable to all welds where

plate or wire electrodes may be employed. Still, it should be limited to cases where there is no free space above the joint and the joint changes in section. In other cases, welding with plate electrodes is a more attractive proposition than with a consumable electrode guide. As for multielectrode welding, it may be replaced by plate-electrode or consumable electrode guide welding in almost every case.

The straight seams welded by the electric slag process run, as a rule, vertically.

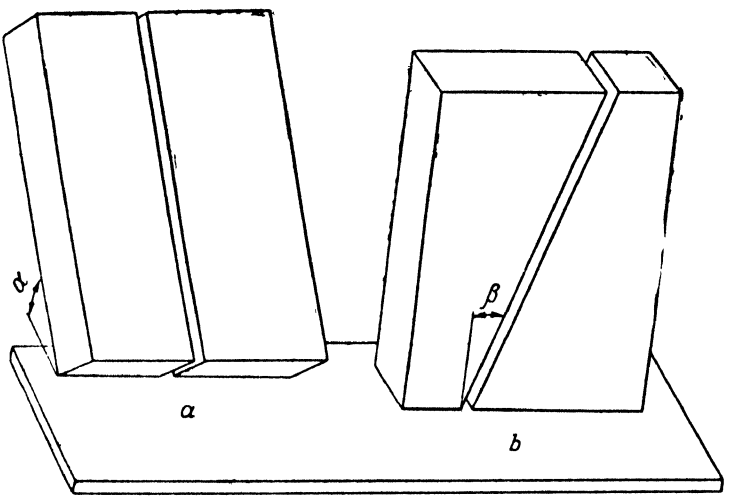

Fig. 85. Tilt of weld in the electric slag process.

When the parts to be welded are at an angle to each other or it is difficult to place them vertically, they may be welded in an inclined position. Two arrangements are possible in this case: (1) the joint is at an angle to the horizontal, but the edges are vertical planes (Fig. 85*a*); and (2) the edges are in inclined planes, but the plane of the plates being welded is vertical (Fig. 86*b*).

In the first case, the permissible angle of tilt also depends on how the weld is shaped on the reverse side. The maximum tilt is less with copper moulding shoes than with a fusible steel backing strip. The angles of tilt in a vertical plane are given in Table 17.

Table 17

Type of moulding accessory	Angle of tilt to the vertical, deg (Fig. 85)	
	α	β
Copper moulding shoes	20-30	10-15
Steel backing strip	30-45	10-15

Greater angles of tilt call for special methods of welding and are not employed, as a rule.

Circumferential seams (Fig. 84*b*) are encountered as often as straight seams. Both in technique and procedure, they are more involved than straight seams. Position tolerances in the fit-up are closer than in the latter case, as the diameter of the blank at the joint can be machined accurate to within ±0.5 mm. The maximum misalignment in the fit-up should not exceed 0.5 to 1 mm. When blanks are roll-formed without machining misalignments as great as 4 to 6 mm have to be tolerated. In such cases, circumferential seams are welded with split-type moulding shoes. When the misalignment is appreciable, a step is formed in the middle of the weld which has to be removed by chipping upon welding. At present, circumferential seams are butt-welded on a commercial scale, while corner and Tee joints are used less often. In some cases, however, it is advisable to replace butt-welded circumferential seams by corner joints. Incidentally, corner-welded circumferential seams would appreciably cut down the cost of large shaft flanges. For the time being, the application of corner-welded circumferential seams is limited, as the fillet weld between the flange and the shaft has to be made to a great radius. It is not at all unlikely that revision of fillet weld size, reallocation of machining allowances, and an increase in weld reinforcement will make it possible to employ flanges in the form of flat disks corner-welded to shafts.

Odd-shaped jobs. Welds of variable thicknesses, bounded by plane surfaces and parts of a circle (Figs. 84*c* and *d*) pose no difficulties in welding, provided the edge (or tangent to the edge) is not more than 30° away from the vertical. Such welds can be made with rod electrodes or consumable electrode guides.

When the cross section of the workpiece is bounded by planes of varying curvature (Fig. 84*e*), welding is possible either with local planing of the edges or with a consumable electrode guide. The second technique is more convenient. Should the section of the weld change too abruptly (Fig. 84*f*), the edges have to be planed locally even if a consumable electrode guide is employed. In cast-welded structures, this purpose is served by bosses, and in rolled metal, by diaphragms. A diaphragm or boss should be at least 50 mm wide; should its height be more than its width, the width in that case must be at least 80 mm. After welding, diaphragms are, as a rule, removed, while bosses may be left, if the design of the workpiece permits that.

2. Edge Preparation and Fit-up

In electric slag welding, the weld groove is formed by the straight edges of the workpiece. The method of edge preparation and the surface finish of the edges should be chosen to suit the thickness of the parts, convenience of work, and the purpose of the weld.

In thicknesses up to 200 mm, the edges are, as a rule, prepared by flame machining, so that high spots are not more than 2 to 3 mm above low spots, and the kerf is not more than 4 mm from a straight line (Fig. 86). When the workpiece is of a difficult-to-weld steel, the kerf tolerances should be closer, as heat penetration is limited.

When heavier sections have to be welded, flame cutting will not produce sufficiently straight edges. Still, if flame cutting equipment is well adjusted, satisfactory kerfs may be obtained on thicknesses up to 400 mm; however, flame cutting should only be resorted to when the edges cannot be easily planed. The edges of circumferential joints are usually planed.

The edges are planed also in the case of relatively light sections, when moulding shoes traverse them, such as in making a fillet weld, or when the metal near the edges is subjected to heavy tension stresses, and an uneven cut may result in dangerous concentrations of stresses.

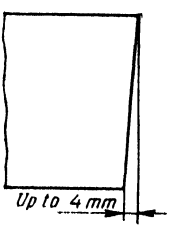

Fig. 86. Deviation of edges from straight cut.

The basic requirements to be met by the surfaces traversed by moulding shoes have been outlined above. When copper backing strips are employed, the edge tolerances remain the same, but no limit is set to the amount warping.

It should be noted that even if the edges are machined, joint preparation is cheaper in electric slag welding than in arc welding. When a long plate sags, or the tank shell to be welded is untrue in form, the desired bevelling of the edges is hard to obtain. Unbevelled edges, on the other hand, are easy to machine, even if they are twisted heavily. Their machining is further simplified when the edges are stack-planed.

When calculating the size of individual parts of a welded structure, it is necessary to know the joint gaps that have to be left between them. It is customary to differentiate between design, fit-up and welding gaps.

The *design gap* is a fictitious quantity used to calculate the dimensions of the parts to be welded. In practice, the parts are fitted up with a larger gap which is called the fit-up gap. The gap does not remain constant throughout welding, but is increased or reduced to suit the prevailing welding conditions.

The *fit-up gap* usually varies over the length of the same joint. Over the greater part of the joint it is larger than the design one. The fit-up gap is specified on the basis of past experience or model workpieces so as to take into account the distortions likely to occur in welding.

When calculating the dimensions of the parts to be welded, distortions need not necessarily be taken into account. Instead, use may be made of Table 18 which gives the values of design joint gaps.

The table covers carbon steels welded with electrodes 3 mm in diameter. The sum of the individual dimensions is the overall dimensions of a welded structure minus the sum of the design gaps. As will be seen from the table, gaps change but little with the thickness of plate.

The fit-up gap at the bottom of the joint should be equal to the welding gap. In case the workpiece is rigid (a plate whose width is greater than the length of the joint, large castings or forgings), the gap at the top of the joint should be increased by 2 to 5 mm for every metre of the joint's length. The lesser increase is for high welding speeds (anywhere from 0.6 to 1.5 m/hr), while the greater increase is valid for a welding speed of the order of 0.2 m/hr.

For fillet and butt welds in very narrow strips (less than 100 to 120 mm), the fit-up gap may be 2 or 3 mm greater than the welding one. This also applies to girth seams in narrow rings.

In welding plates of medium width or parts of medium rigidity, the nature of distortions is hard to anticipate. The usual practice in such cases is to make the gap at the top of the joint as wide as in rigid workpieces, and to make corrections after a trial weld or after the first production workpieces have been welded.

For greater detail about the distortions occurring in electric slag welding refer to Chapter V.

In plates and workpieces of medium and high rigidity, the gap changes differently along the length of the joint during welding. Therefore, if the welding gap is to remain constant, the fit-up gap should vary in width accordingly. In most cases, this is unfeasible, and workpieces have to be jigged so that the minimum welding gap is not less than indicated in Table 18.

Table 18

Plate thickness, mm	50-70	70-100	100-200	200-500
Design gap, mm	18	20	22	25
Welding gap, mm	20	22	24	28

In rigid workpieces and at low welding speeds, the critical spot in the weld is the end of the joint, while in workpieces of medium rigidity, it is the middle of the joint. In longitudinal seams on cylindrical products, the gap is narrowest in the middle of the run. The recommended procedure is to tack-weld the middle of the joint and to leave untacked the end of the joint or to clamp it in place with wedges not preventing the gap from opening up.

The fit-up for electric slag welding substantially differs from the one for arc welding. If the ratio of length to thickness is less than 20, the plates are usually lined up without pre-forming which is usually done to eliminate shifting from the desired position. If the plates are uneven, the resultant misalignments should be distributed uniformly so as to make the largest misalignment as small as possible. The maximum offset of the edges has been discussed above. As a

rule, the requirements to the design of the workpiece are more stringent than to a welding procedure.

When the ratio of length to thickness is more than 20, a free fit-up results, as a rule, in a greater offset. It is eliminated by bending the

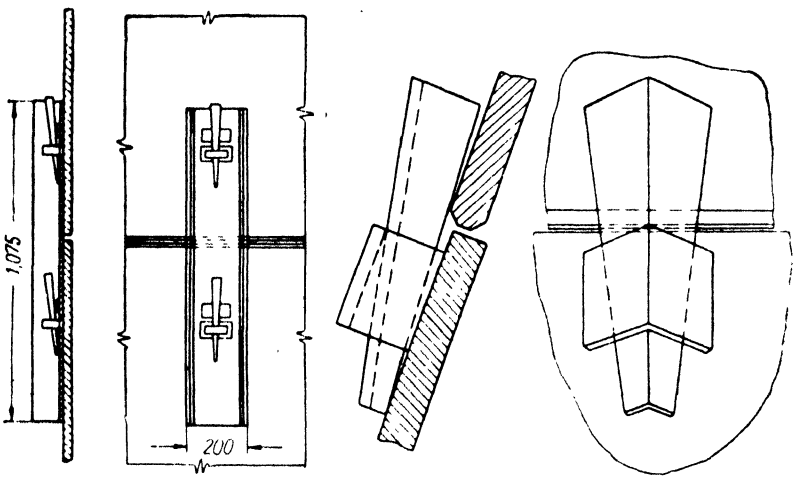

Fig. 87. Tools for fitting up sheet and plate for arc welding:
a—channel and wedges; *b*—angle and wedges

plates in the appropriate direction. In arc welding, this is an extremely labour- and time-consuming operation, especially on heavy sections.

Plates are often straightened by means of twin spacers, each having two round holes. The spacers are placed in the gap between the edges, and wedges are driven into their holes. As the gap in arc welding is seldom more than 4 mm, the pressure supplied by the twin spacers is small, and has to be supplemented by channels and wedges (Figs. 87*a* and *b*) and other fixtures.

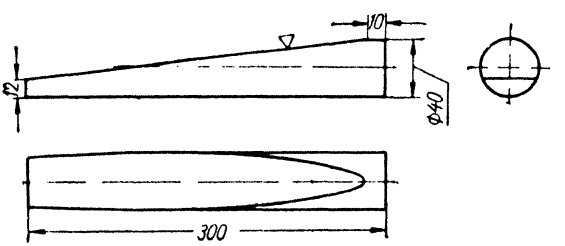

Fig. 88. Cylindrical wedge employed in fitting up jobs for electric slag welding.

In electric slag welding the gap is never less than 16 to 20 mm, and the spacers may be thick. The tapered wedges usually employed in fitting up for manual welding should be replaced by bevelled cylindrical wedges

(Fig. 88). They develop a pressure, which is many times that of the tapered wedges, thus making it possible when necessary to handle plates up to 30 mm thick.

Prior to welding, fit-up tools should be removed and replaced with tacking devices. In arc welding, the plates are usually tacked by manual welding. In electric slag welding, the gap between the edges should be left vacant for the electrode guide to move in, and the assembled parts have to be held in place by separate fixtures.

In some cases, distance pieces may be left in the gap and removed as soon as the electrode guide approaches them.

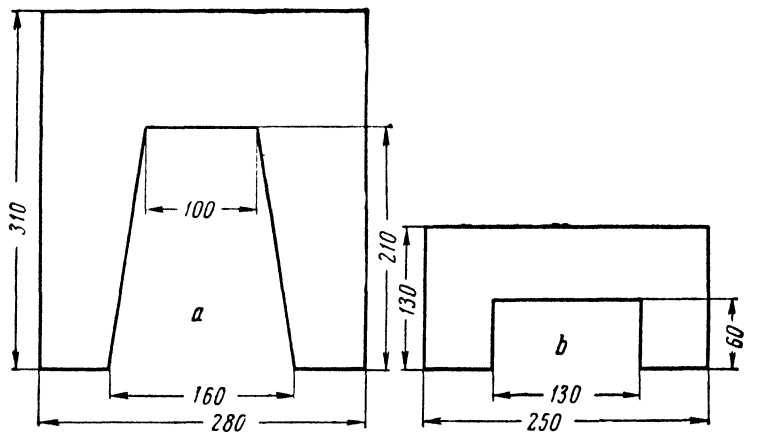

Fig. 89. Clamps employed in fit-up for electric slag welding. Clamp *a* is employed in conjunction with a moulding shoe on the reverse side of the weld.

Very often use is made of clamps welded on the rear side of the joint. The cut in a clamp is intended for a moulding shoe or a backing strip to pass in.

When heavy sections are to be welded and the welding speed has to be low, clamps are replaced by plates that are welded on the front side and removed during welding. The plates are tacked on one side and are knocked off by a blow at the root side, when the welding machine approaches. However, they are inconvenient when the rod of the rear moulding shoe suspension is passed through the gap, as the plates have to be removed too far ahead of the welding machine.

In every case the line-up tools should be sufficiently strong and rigid to prevent the gap from changing when the weld is started, as at this instant the relative displacement of the parts being welded is quickest and most unpredictable. If the parts are clamped too fast, there is the danger that hot cracks may develop in the weld, especially when the composition of the weld metal is unbalanced. The

clamps shown in Figs. 89*a* and *b* meet practically all these requirements.

If the parts to be welded do not sag in the fit-up, there is no need to clamp them at several points. Broad plates and other rigid workpieces are clamped by a starting tab from below and a clamp or a plate from above. When the length of the workpiece is such that the clamp can be removed after about half the weld has been completed, the slot in the clamp is made as high as the thickness of the finishing tab. If, instead of the finishing tab, some length is added to the workpiece, the clamp may be substituted by a plain plate. If the clamp or plate cannot be removed during welding, the slot in it is made high enough to pass the electrode guide and, if necessary, the rod of the rear moulding block suspension, but in such a way that the shrinkage cavity, if any, will be led out of the work.

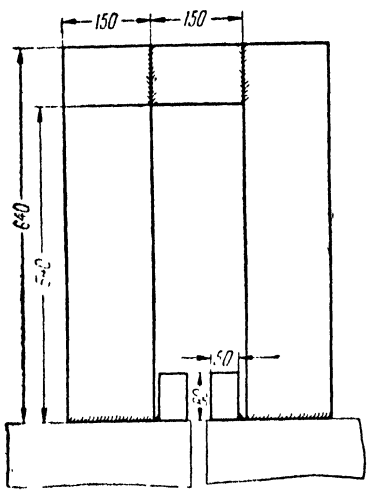

Fig. 90 End clamp and finishing tabs.

Workpieces of medium rigidity, plates whose width is less than half their height, and longitudinal seams on cylindrical products should be clamped from below and in the middle, while at the end of the joint there should be a spacer to prevent the edges from pulling together.

In workpieces where angular distortion is intolerable, it is a good plan to avoid side clamps; the middle of the joint should be fixed by spacers placed symmetrically relative to the axial plane of the plates, provided they can be removed in welding.

Corner and Tee joints are clamped by gussets whose thickness must be two- or three-tenths of the plate thickness. They should be spaced 6 to 8 plate thicknesses apart. Gussets of smaller thickness are used when the weld is made with a copper back-up strip, while gussets of greater thickness are employed in conjunction with rear-suspension moulding shoes.

3. Technique for Straight Seams

By the term technique in our discussion will be meant a set of operations which produce a weld of desired shape without any visible defects. The attainment of the desired mechanical properties and control of cracks and cavities are covered by welding procedures.

More specifically, a technique in electric slag welding includes:

(1) Introduction of electrodes into a closed groove, feed of electrodes, and continuous supply of current to them;

(2) Maintenance of a stable electric slag welding;

(3) Moulding of the weld and retention of the slag pool;

(4) Attainment of sufficiently uniform penetration and reliable fusion.

Electric slag welding is feasible with electrodes of various cross sections and shapes, from electrode wire less than one millimetre in diameter to plates or rods with a cross-sectional area running into tens and even hundreds of square centimetres. Most often use is made of wire 3 mm in diameter and plate electrodes 8 to 12 mm thick, that are as wide as the metal being welded.

When the diameter of the electrode is large and the thickness of the workpiece is up to 50 or 60 mm, the electrode guide may be left outside the groove. The wire is then passed through the welding machine, bent and fed into the groove so that it follows the arc of a circle and arrives at the surface of the metal pool with its axis in line with the axis of the joint (Fig. 91*a*). In this way, the position of the electrode relative to the axis of the groove is maintained constant for all variations in the level of the metal pool, and the surface of the metal pool is continuously heated.

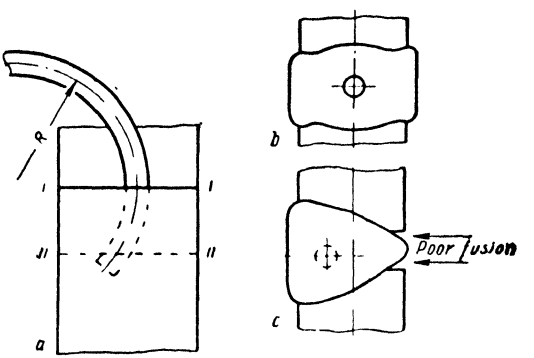

Fig. 91. Electric slag welding with curved electrode (*a*, *b*); when the level of the metal pool drops from *I-I* to *II-II*, poor fusion (*c*) takes place.

However, the positioning of the electrode with this arrangement is not so accurate when heavy sections are welded, and slender electrodes are employed. The electrode guide should be introduced into the groove, so that it is straightened inside the groove, and the axes of the joint and electrode are brought in line, irrespective of the position of the metal pool. The electric slag welding machines manufactured for some time past have all been made with an electrode guide which is introduced into the groove and straightens the electrode.

As a rule, the slag pool is retained and the weld face shaped by a travelling moulding shoe. The bead on the reverse side may be shaped either by another travelling moulding shoe or by a cooled stationary back-up strip. An alternative is to cover the reverse side of the

groove with a steel plate of sufficient thickness. Usually, the plate is welded to the workpiece and is then called a fusible backing strip.

The moulding shoe is attached to, and moves with, the welding machine. The suspension of the moulding shoe should be such that the moulding shoe fits closely to the surface of the workpiece, even if the edges are uneven. The backing moulding shoe may be attached either to the welding machine by means of a rod or to a separate carriage travelling on an external beam.

The number of electrodes that should be employed to weld a given workpiece is a problem which involves many factors, especially when it affects the selection of a welding machine. The problem should be tackled with due consideration given to the welding technique, the quality of the welded joint and the economics of welding.

Table 19 gives the maximum thicknesses welded with one, two, and three electrodes.

Table 19

Number of electrodes	Thickness to be welded, mm	
	oscillating electrode	stationary electrode
1	Up to 60	Up to 150
2	60-130	Up to 350
3	110-200	Up to 600

As can be seen from the table, the maximum thickness per electrode rises somewhat with the number of electrodes used. This is due to a relative decrease in surface heat abstraction and in the loss of heat to the moulding shoe.

For economical reasons, the number of electrodes should be increased before the maximum thickness is reached for the fewer electrodes. However, the production rate does not rise in proportion to the number of electrodes. If, with fewer electrodes, the electrode speed was such that any further increase in it might cause hot cracks in the weld, the speed has to be reduced, if the number of electrodes is increased.

Thicknesses up to 50 mm should be welded with a single stationary electrode, and those between 40 and 70 mm, with two weaving electrodes.

Thicknesses less than 30 mm should be welded by the electric slag process rather than manually only when it is inconvenient or impossible to weld in the downhand position. Otherwise, they can be welded more advantageously by the submerged arc process.

It is a good practice to weld sections from 70 to 150 mm with two electrodes, resorting to the weaving-motion technique when the thickness is upwards of 85 mm. In the range from 70 to 85 mm the swing of the electrode is too small, and it is not advisable to complicate the operation by the weaving motion of the electrode.

Sections upwards of 150 mm are usually welded with three oscillating electrodes.

Power for multielectrode welding is drawn from a three-phase line. Therefore, for the load on the line and the equipment to be balanced, the number of electrodes employed should be multiple of three (or, alternatively, there should be three electrodes, if the electrode guides are introduced into the groove sidewise). This is essential when the supply mains are of low power.

In many cases it pays to increase the thickness of metal per electrode, even though it increases time requirements. These cases are: (a) when the joints are short and the workpieces differ widely in design (in such cases the time spent on resetting a multielectrode welding machine is not compensated by the gain in the weld time); (b) when the workpieces are of varying thickness; (c) when little heat is abstracted away from the weld and the workpiece may be overheated otherwise, such as with fillet welds or workpieces of small size; (d) when there is no three- (or two-) electrode welding machine available; (e) when the workpieces are of difficult-to-weld steel, and the broad weaving motion of the electrodes reduces the danger of cracks developing in and near the weld.

An important aspect of a welding technique is the selection of an adequate method for moulding the bead on the reverse side. All the expedients discussed above—the moulding shoe, the copper back-up strip, the fusible backing strip, and the fish-mouth joint—both offer advantages and pose problems which must be weighed against one another in each particular case.

The moulding shoe vs. the copper back-up strip. The advantages offered by the moulding shoe are:

(1) The possibility of watching the reverse side of the weld. This is of special importance when several weaving electrodes are employed, as a check can be kept on the position of the rear electrode. When the weaving technique is not employed, the position of the rear electrode is not so critical, and this advantage loses in value;

(2) When in welding with several electrodes, either of the two extreme electrodes goes out of action, the weld can be completed with the remaining electrodes by readjusting their swing. With the back-up strip this is possible only when the fore electrode is at fault;

(3) Less time is taken to set the moulding shoe than the back-up strip, nor are any auxiliary fastenings required;

(4) Savings in copper and labour;

(5) The sensing element of the slag pool level gauge can be duplicated in welding circumferential seams on thick-walled workpieces,

where the outside moulding shoe is inoperative in the initial welding position.

The advantages offered by a solid copper back-up strip are:

(1) No constant watch or hammering is required during welding. This is of particular importance when there is no room for the operator behind the weld;

(2) Clamps may be not so large as in welding with a backing moulding shoe;

(3) The gap between the edges is not crowded by the backing shoe suspension, which is of special importance in welding circumferential seams where the suspension prevents the operator from closing the weld;

(4) The back-up strip tolerates heavy waviness on the rear side of the weld, which is of importance when castings are to be welded;

(5) A back-up strip can be mounted on the next joint while the previous one is being welded, and the welding equipment is thus utilised better.

A fusible backing strip is convenient in that it can be used in the fit-up. However, when it is tack-welded to both parts being welded, the joint becomes too rigid, and cracks may develop in the weld. This is why fusible backing strips are usually tacked on one side and bonded with a mixture of clay and asbestos fibre to the other. A disadvantage of this technique is that separate fixtures are required for the fit-up. On the other hand, fusible backing strips need no water cooling.

The disadvantages of a fusible backing strip are: increased metal consumption and the unfavourable shape of the weld section, especially of an angular one.

The slot between the backing strip and the workpiece acts as a notch, and an increased load may result in cracking. Sometimes the gap between the fusible strip and the edges may become a centre of cracking already in welding.

Electric slag welding is started by melting the flux and raising its temperature to a point where the welding proceeds steadily. In practice, this is done by causing an electric arc to strike between the electrode and the workpiece inside the groove *, and by pouring an amount of flux into the groove immediately after the arc has struck. As it melts, the flux establishes a path for the flow of welding current, and the arc goes out after a few flares, and the welding is continued by the electric slag process. As the conditions for a steady electric slag welding conflict with the conditions for a stable arc, the activation of an arc and the establishment of a slag pool may pose a number of difficulties.

When welding power is drawn from a d. c. source or from a varia-

* If the flux used is current-conducting at room temperature, slag welding commences immediately, without any arc to melt the flux.

ble-inductance transformer, the field current of the generator or the inductance of the transformer can be varied so as to obtain the best possible conditions for the maintenance of the arc in the beginning and for its suppression as soon as a slag pool has been formed. At present, however, such schemes are seldom employed.

When welding power is drawn from an a. c. source, with a straight-line volt-ampere characteristic, it is difficult to maintain a stable arc. In such a case, it is easier to start the welding process by reducing the electrode speed to 100 or 120 m/hr. To this end, the electrode feed mechanisms of electric slag welding machines usually employ variable-speed electric motors.

The weld is initiated on a starting tab which is a piece of plate of the same thickness as the workpiece. The starting tab has a slot up to 50 mm deep (Fig. 92) which allows the welder to achieve a steady-state condition by the time the workpiece proper is reached. Simultaneously, the edges of the workpiece are preheated.

In the initial welding position the electrode may be short-circuited or buckle towards the front or rear edges. To avoid damage to the moulding shoe or back-up strip, they may be protected by paper-insulated strips of tinplate or thin wooden splinters.

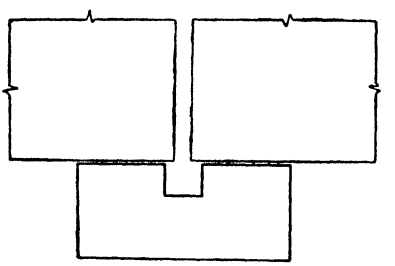

Fig. 92. Starting tab.

The welding should be started at an elevated voltage. After the edges have been sweated, the voltage may be reduced to the one specified for a given welding procedure.

Prior to welding, the welding head and the moulding shoe are positioned so that the welding start 30 to 50 mm below the normal level of the pool. The slot in the starting tab should be filled without raising the apparatus. As soon as the metal pool has reached the specified level relative to the moulding shoe, the vertical motion motor should be switched on. The increased dry length of the electrode will speed up the attainment of a steady state condition.

During welding, constant watch should be kept on the welding conditions, the position and direction of the electrodes, and the clearance, if any, between the moulding shoe and the surface. The moulding shoe should be knocked at regularly without waiting for slag to lodge on its sides. Should the slag pool run out, add some flux into the groove so as to restore the level of the slag pool. If this be of no avail, reduce the electrode speed to 120 or 150 m/hr. Leaky spots should be thoroughly checked for possible defects.

In case of interruptions in welding thick-walled articles intended for critical applications, the weld has to be removed and started anew. The weld is usually removed by flame gauging.

When the workpiece is relatively thin (up to 100 mm), the seam may be restarted where it has been stopped, but the weld should be chipped back prior to restarting. If the metal being welded contains more than 0.3 per cent carbon, it has to be annealed before the abandoned weld is restarted, otherwise the welding stresses brought about by the repeated activation of electric slag welding may result in brittle fracture in the parent metal.

A weld usually terminates in a shrinkage cavity 20 to 30 mm deep. In order to bring it outside the weld, finishing tabs at least 80 mm long are mounted above the groove. The weld is continued until the slag flows over the finishing tab.

As has been noted, electric slag welding is applicable to both vertical and inclined joints. For thicknesses up to 100 mm, satisfactory welds can be obtained when the joints are up to 45° from the vertical. However, the bead on the reverse side is harder to mould in the inclined than in the vertical position.

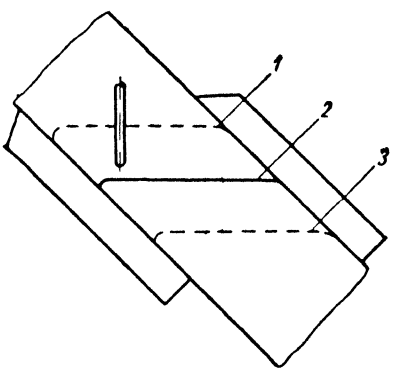

Fig. 93. Diagram of electric slag welding of inclined seams:
1—increased level of metal pool (poor penetration); *2*—normal level; *3*—lowered level (burn-through).

As experience has shown, penetration in the lower edges in inclined joints is considerably less than in the upper edges, and the weld is poorly shaped. This may partially be due to the operator's desire to position the electrode roughly parallel to the backing moulding shoe or strip so as to avoid excess penetration in case the level of the pool should drop. However, reliable penetration of the lower edges is difficult to obtain even if the electrode be held strictly vertical, because they are overflown by molten metal.

Changes in the level of the metal pool vary the position of the zone where the electrode melts, relative to the moulding shoe (Fig. 93). When the level of the pool rises, the electrode tip moves away from the moulding shoe, and poor penetration of the edges is likely to occur. When the level of the pool drops, the electrode tip moves towards the moulding shoe and may burn through it.

If the tilt is 30° to the vertical and the welding conditions are strictly observed, reliable and sound welds are obtained. The welding conditions for inclined joints may be recommended the same as for vertical joints, but in this case the welding voltage should be 3 to 5 v higher.

4. Technique for Circumferential Seams

In welding circumferential seams, the welding machine and the moulding shoe are stationary for the most part of the time, but the workpiece is rotated. The welding technique in this case differs from that used for straight seams in (1) the design of moulding devices for the reverse bead; and (2) in that the tail of the weld should meet the head of the weld.

The reverse bead may be shaped by (1) a water-cooled copper ring, (2) a fusible steel ring, or (3) a backing moulding shoe. Fish-mouth joints are also applicable to circumferential seams.

The merits and demerits of the copper ring are the same as of the copper back-up strip for straight seams. When making a circumferential weld, the whole or part of it is welded in the inclined position. It is therefore more difficult to adjust the approach of the electrode and to keep watch on the penetration of the inside edges than when welding straight seams. The copper ring calls for an accurate check on the level of the pool and the accurate positioning of the electrode as it leaves the guide, especially when heavy sections are welded. This is the reason why the copper ring may only be recommended for circumferential seams in relatively light sections, welded with a stationary electrode, or when no other method of moulding the bead on the reverse side is applicable.

With the fusible steel ring, the approach of the electrode is less of a critical factor than with the copper ring, as the inadvertent arc that may strike when the electrode moves too closely to the ring, cannot seriously upset the welding. Nevertheless, such an inadvertent arc should be avoided, as the electrode guide may be splashed with metal and the weld may sometimes be porous. An inadvertent arc is especially undesirable when welding with alternating current drawn from transformers with a straight-line volt-ampere characteristic.

The disadvantages of the steel ring are the same as in the case of the steel backing strip for straight seams. They are: increased metal consumption, difficulties in the fit-up, and the danger of cracks developing in the weld, when the ring is employed to clamp the parts to be welded in assembly. The unfavourable section of the resultant weld is of importance only when the workpiece is not to be machined after welding.

Steel rings are employed when workpieces are of small diameter or the weld is far from the end faces, and it is difficult to resort to a moulding shoe. The ring should be the size of a backing strip, that is, 25 to 30 mm thick and 80 to 100 mm wide. Rings may be employed only when they may be left in the workpiece or when the workpiece is to be machined after welding.

A backing moulding shoe is used whenever the shape of the workpiece permits. Its main advantage is that a check can be kept on the

approach of the electrode to the inside edges and on its direction. Its drawback is that it is difficult to mount in closed vessels or when the weld is far from the end face of the workpiece. Figs. 94*a* and *b*, show two arrangements for suspending the inside moulding shoe in the making of girth joints.

The difficulty in making the two ends of a weld meet increases as the ratio of wall thickness to diameter grows.

Circumferential welds should, as a rule, be made with the metal pool held in the plane of the horizontal diameter, as this is the most convenient position. The metal pool should be raised 20 to 30° above the plane of the horizontal diameter only when closing the weld.

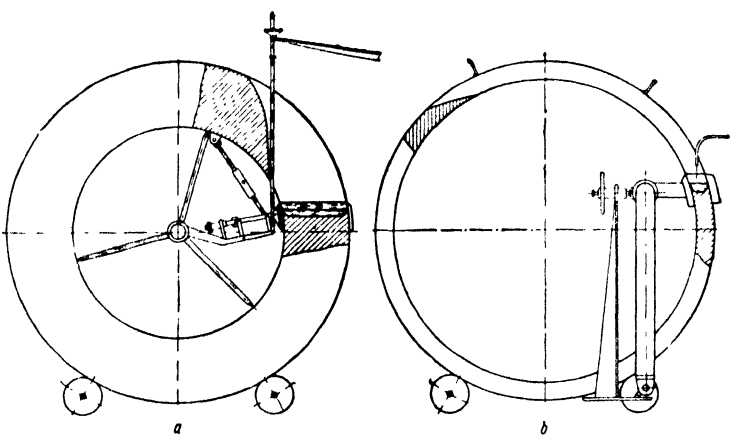

Fig. 94. Possible suspension of inside moulding shoes in welding circumferential seams by the electric slag process.

To this end, welding machines for girth welds should have a vertical motion drive similar to that of the welding apparatus for straight seams.

When welding a thin-walled workpiece, the metal pool may be held 15 to 20° above the horizontal diameter, without lifting the apparatus. Although this is a less convenient position, this is not felt, as the angle of tilt is small, especially when the weld is wide. Still, if the welding machine has a vertical motion drive, the greater portion of the weld should preferably be made in the vertical position, no matter how thick the workpiece may be.

Modern electric slag welding machines for circumferential welds always have a vertical motion drive so that they can be employed, when necessary, to weld thick-walled articles. When circumferential welds are made casually, welding machines for straight welds may be employed, provided they have a drive to lift the welding head.

Thus, circumferential welds have to be made without lifting the welding head only when apparatus not intended for electric slag welding is employed.

The beginning of a circumferential weld is usually removed during welding by an arc or by a gas torch. As the workpiece rotates slowly, this operation is not at all difficult to perform. Other methods of avoiding distortion in the beginning of a circumferential weld have not found any appreciable use.

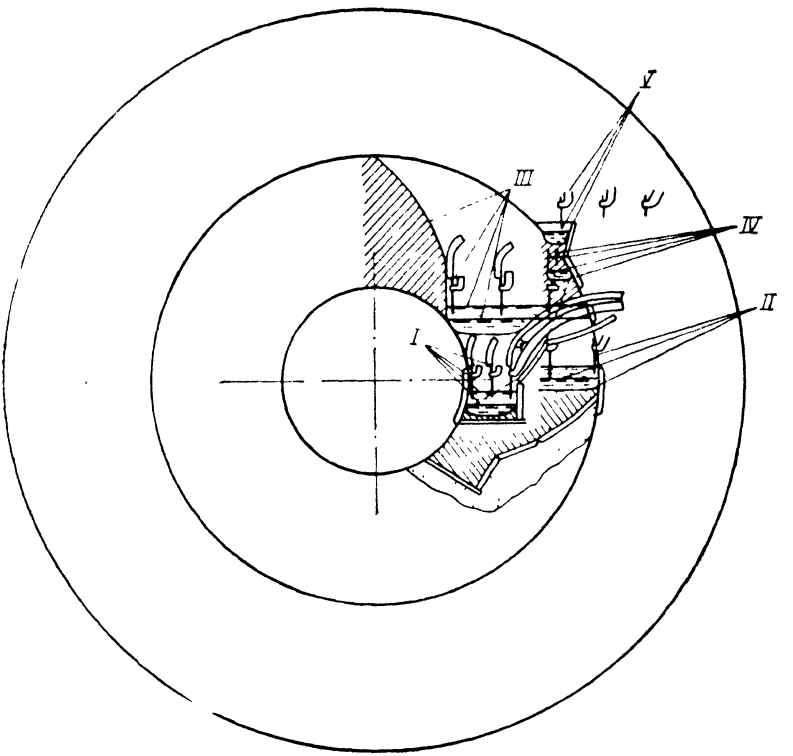

Fig. 95. Closing of a circumferential weld shown schematically.

The beginning of a weld is removed as shown in Fig. 95. Besides, the moulding shoe has attachments for bringing the shrinkage hole outside the weld.

When welding thick-walled small-diameter workpieces, the welding machine must necessarily be lifted. Besides, the distance between the electrodes has to be readjusted in welding.

Fig. 95 shows the starting and closing of a circumferential weld on a workpiece with a wall thickness of 400 mm and an outside diameter of 1,300 mm.

The start is made below the plane of the horizontal diameter (position *I*). This is done so as to reduce the vertical dimensions of the electric guide and thus improve their serviceability. An auxiliary square pocket holds the slag pool and preheats the edges when the weld is just being started. The pocket is made of a 25 mm square section tacked to one of the pieces being welded prior to assembly At first, the electrodes are brought as close to each other as possible (within 60 mm). As the bottom of the pocket is horizontal, the weld is started with the three electrodes simultaneously.

The transition from position *I* to position *II* is performed by lifting the movable part of the apparatus. In position *II*, the surface of the metal pool is level with the plane of the horizontal diameter of the workpiece. This is where the major portion of the weld is made. The apparatus is kept in this position and meanwhile the workpiece is rotated. This position is convenient for welding as the electrodes are practically parallel to the contact surface of the moulding shoes, and their approach to the shoes is easier to watch than in an inclined position.

As soon as the beginning of the weld reaches position *III* the workpiece stops rotating, and the movable part of the apparatus is lifted. This is when the weld commences to close. The apparatus is lifted until position *IV* is reached, with the workpiece meanwhile remaining stationary in position *III*. Then the apparatus is stopped, and the workpiece is again rotated until brought to position *IV*. The transition from position *IV* to position *V* is effected by again lifting the apparatus with the moulding shoe remaining stationary. Position *V* completes the weld.

The pocket is cut off by a gas torch or by an arc while the workpiece is moving from position *II* to position *III*. The operation can be conveniently completed in one to three hours, depending on the size of the weld.

When the wall thickness to diameter ratio is high, electric slag welding is still more complicated, as the difference in the peripheral speed of the outside and inside sections of the joint increases. In some workpieces the speed ratio or, which is the same, the outside to inside diameter ratio may be as high as 2.5. Should the welding conditions remain the same as for a stationary workpiece, the molten metal would flow away from the inside to the outside (Fig. 96). As a result, there will be excessive penetration on the inside and poor penetration on the outside.

In welding with several electrodes, the overflow may be reduced considerably by feeding the electrodes at different speeds proportional to the average peripheral speed of the weld section covered by the respective electrode. In other words, the speed will be low for the rear electrode and high for the fore electrode.

At low electrode speeds (200 to 300 m/hr for electrodes 3 mm in diameter) penetration is inversely proportional to the electrode speed.

Therefore, the overflow of metal should be undercompensated in the first case and overcompensated in the second case so that penetration may be uniform. In practice only the first case is encountered, as circumferential welds are made at relatively low electrode speeds.

The flow of metal can be compensated by adjusting the electrode speed, only if the speed of each electrode can be controlled separately during welding. Otherwise, the difference in the electrode speed will reverse the flow of metal when the workpiece is stationary and the welding machine is being lifted. Increased rigidity of this portion may result in cracks when the weld is being closed. Therefore the welding conditions should be chosen so as to primarily suit this portion of the joint. For this reason, the electrodes should be fed at the same speed, ignoring the ununiform penetration on the basic length of the weld, or making up for it by varying the voltage between the electrodes. To this end, the power source should permit separate voltage regulation for each phase.

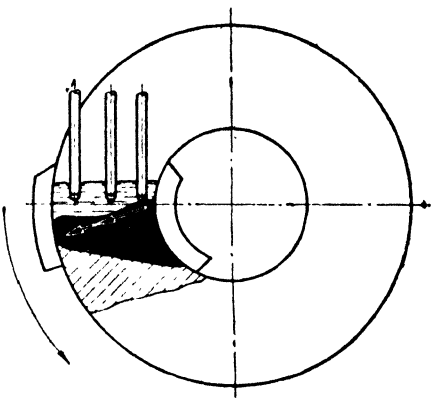

Fig. 96. Flow of molten metal towards outside surface of a thick-walled article when welding a circumferential seam by the electric slag process

These difficulties are eliminated when the electrodes of a slag welding machine for girth welds have individual drives.

In principle, girth welds can also be made with consumable electrode guides. This technique may prove efficient when the machines have no rotary motion.

5. Consumable Electrode-guide Technique

A consumable electrode guide is a device serving to guide an electrode and supply current to it. It consists of a set of plates, rods or tubes forming a passage for electrode wire. Being an expendable piece of equipment, its construction should be as simple and as cheap as possible. In fact, it should be regarded as welding material rather than as part of the welding machine. The apparatus for welding with a consumable electrode guide consists of a wire feed mechanism, which is mounted, as a rule, directly on the workpiece. The cross-sectional area of the electrode guide is 10 to 50 per cent of the cross section of the joint gap.

The construction of consumable electrode guides depends on the number of welds made and on how widely they differ in design. When a large number of straight welds of the same thickness have to be welded, electrode guides pressed from sheet metal (Fig. 97*a*) offer advantages. The difference in the length of welds is a minor consideration, as electrode guides may be made in standard lengths and then spliced or, conversely, cut into pieces. When there are many

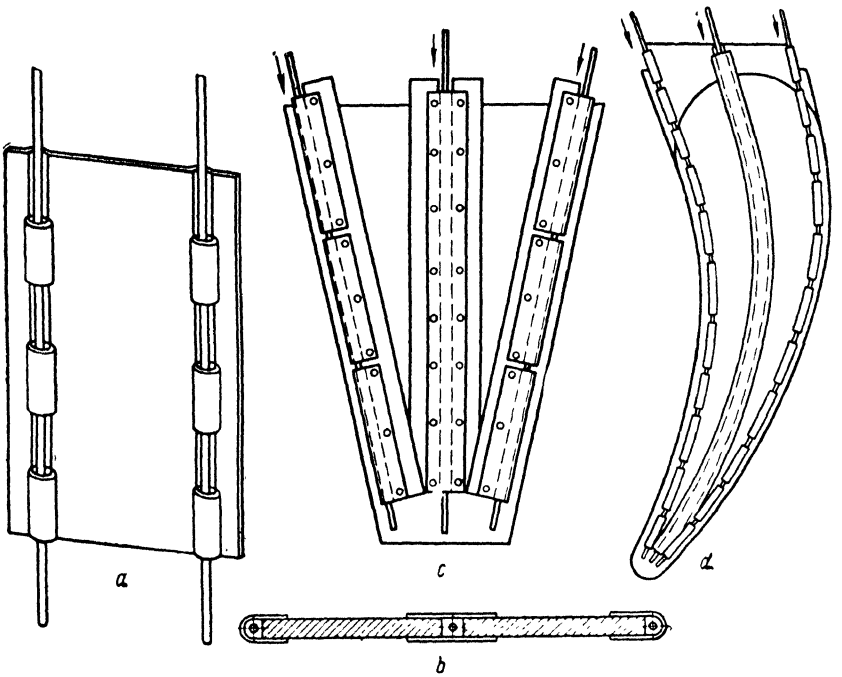

Fig. 97. Designs of consumable electrode guides.

joints of varying thickness, each fluted member of an electrode guide should be pressed separately, and then linked by an adjustable clamp.

As to curvilinear seams, this type of electrode guide may only be employed when making welds of a similar shape on a mass scale. Pressed electrode guides are most convenient where they should be as small as possible in cross section, usually when joints are thick and the power source is of limited capacity. Their use, however, is limited by the difficulties encountered in making dies.

The electrode guides shown in Fig. 97*b* take more labour to make, but their manufacture is easier to plan. They are welded by spot welding out of strips 4 to 5 mm thick and plates 1 mm thick. The width of the strips should be 5 mm less than the distance between the elec-

trodes, while the plates should be 20 mm wide. The plates for outer electrodes are bent in the simplest fixtures or on mandrels clamped in vices. When necessary, such a guide can be welded by an arc process using a slender electrode.

The cross section of these electrode guides is at least 20 per cent of the groove cross section. Therefore, the chemical composition of the strip, accounting for the greater proportion of the cross section of the guide will have an appreciable effect on weld composition.

This type of electrode guide for variable-section welds is made either from strips (Fig. 97*c*) or sheet cut to conform to the longitudinal section of the joint (Fig. 97*d*).

The electrode spacing for straight welds should be 30 to 70 mm, while the distance from the axis of an electrode to the surface of the workpiece should be 20 mm, in case more than one electrode is employed.

Thus, the maximum metal thickness δ welded with a consumable multielectrode guide is

$$\delta = 70\,(n-1)+40 = 70n-30,$$

where n is the number of electrodes.

The conditions for welding with consumable electrode guides differ somewhat from those for electrode wire. In fact, they may be regarded as a combination of two sets of conditions: one set being for welding with a wire whose dry length is zero, and the other for welding with an electrode whose section is equal to that of the electrode guide fed into the slag pool at a rate equal to the welding speed—which can be found by the equation

$$v_w = v_e \frac{\Sigma F_e}{F_g - F_{e \cdot g}},$$

where $F_{e \cdot g}$ is the cross section of the electrode guide; v_w and v_e, the welding and electrode speed, respectively; F_e, the cross-sectional area of the electrode wire; and F_g, the cross-sectional area of the gap.

On light sections, the electrode speed should be of such an order as to give the maximum welding speed without producing hot cracks in the weld. On heavy sections, the electrode speed should be so chosen as to ensure the maximum obtainable current from the available power source.

The current in welding with a consumable electrode guide is on the average the same as with oscillating electrodes (given the same thickness of metal, welding speed and a very short dry length).

For the sake of uniform penetration, metal thickness per electrode has to be small, while the electrode speed has to be reduced considerably compared with oscillating electrodes in order to avoid cracks and to balance the load on the power source and mains. However, if very heavy sections have to be welded and the power source is of a compar-

atively low power rating, any reduction of electrode speed poses a problem. When it touches the surface of the slag pool, the end of the electrode guide melts at a rate which is much higher than the welding speed, and a gap 3 to 5 mm wide forms between the slag pool and the electrode guide very soon. The actual width of this gap depends on the surface tension of the molten slag. In the few seconds in which the gap is closed by the rising slag pool, the current is governed solely by the electrode speed. When the guide melts, the current rises by 20 to 30 per cent. The variations in the current value result in an ununiform width of the weld. This phenomenon is more pronounced with larger guides and is less noticeable with increased welding speeds. At a welding speed of over 1 m/hr, it has practically no effect on the quality of the weld.

The welds on both sides of the workpiece are moulded either by copper back-up strips or fusible steel backing strips. As a rule, moulding shoes are not employed in welding with consumable electrode guides. The choice between a copper and a fusible backing strip is made on the same basis as for conventional electric slag welding with electrode wire. Sometimes, the weld on one side (less often, on both sides) is moulded by two short (150 to 200 mm) backing strips that can be moved from place to place along the joint in welding. In this way, a better check is provided over the welding and the surface finish of the bead.

As there are no moulding shoe suspensions, and no lifting and electrode-weaving mechanisms, equipment for welding with consumable electrode guides may be highly portable. To utilise this feature to best advantage, the feed rollers are not insulated from each other or from the drive; and welding power is drawn from a single-phase transformer. If necessary, consumable electrode guides may be powered from a three-phase system, but then the feed mechanism would be heavier.

Heavy sections are more convenient to weld with two or three single-phase sets powered from a three-phase transformer (or from three single-phase transformers operating from a three-phase line). No difficulties are encountered in splitting up a consumable electrode guide into several phases, as on heavy sections the distance between the electrodes is great enough.

The electrode voltage in welding with a consumable guide is, on the average, 10 v below that of conventional electric slag welding. Accordingly, the least voltage of the welding transformer is 26 v.

The single-phase welding sets manufactured to date are designed for welding thicknesses up to 200 or 250 mm. The maximum continuous current rating of the set is 2,000 a, and it has a kva rating of 100.

A consumable electrode guide cannot position the electrode as accurately as a regular guide. However, the wire deflects but little from the axis of the groove and penetration is sufficiently symmetrical, because there is no dry length on the wire.

Because of the way a consumable guide is fastened to the welding apparatus and due to the rigidity of the guide itself, it cannot be placed symmetrically in the groove or isolated from the workpiece. On the other hand, the immobility of the guide relative to the edges, simplifies its insulation, as compared with a moving guide. However, the welding technique with a consumable electrode guide limits the range of insulating materials that may be used. The point is that when moulding strips are placed all along the length of the joint, the insulation is immersed in the slag pool. Therefore, it must not contain substances, which may contaminate the weld metal or upset the stability of welding. For this reason, asbestos cannot be employed at all.

Insulating materials should be sufficiently stable at elevated temperatures, or the non-insulated end of the electrode guide will be too long. At the same time, the insulation must be cheap, as it is used only once.

The desired degree of insulation is provided by fibreglass, but it is too expensive and cannot be employed in large quantities.

Therefore, the best possible choice is glass made in brackets or, when brackets are unavailable, in plates. Fig. 98 shows a cross-sectional view of a joint prepared for welding with a consumable electrode guide.

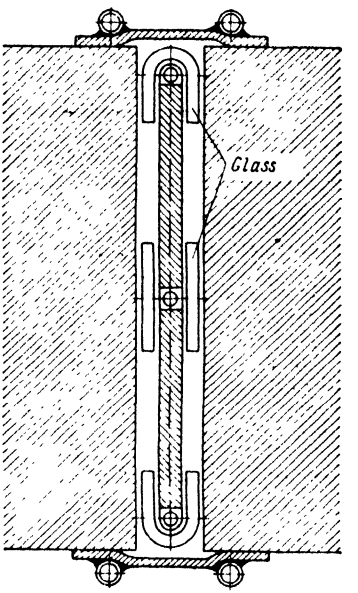

Fig. 98. Section of a joint prepared for electric slag welding with consumable electrode guide.

A consumable electrode guide is placed in the groove separately from the welding apparatus. This operation can be performed while the previous joint is being welded. Then the welding apparatus is put on the workpiece and connected to the electrode guide.

Sometimes, when the electrode touches the work in the absence of the slag pool at the beginning, it may freeze to the guide tip. However, the union is destroyed as soon as the slag pool produced by the other electrodes rises level with the faulty one. Until covered by the slag pool, the pinch roller of the idle electrode should be pushed aside, for otherwise the grooves of the feed rollers will become overworn. To avoid poor penetration in a case when an electrode has stuck to the guide, the lower tip of the guide should be held 30 to 40 mm below the bottom edge of the workpiece and 30 mm above the bottom of the slag pocket.

The amount of flux poured into the groove prior to welding is twice the volume of the slag pool 40 mm deep. The weld is started as usual at a reduced electrode speed. After the welding process has reached a steady state condition, the electrode speed is gradually brought up to the specified one. If at the increased speed the stability of welding is upset, some more flux may be added to the slag pool, but not more than a quarter of the initial amount. Later on, flux should be added in small portions as soon as it is seen that the stability of welding is liable to be upset (the pointers of the instruments deflect sharply, the slag sputters, and a specific noise is heard).

For the suggested conditions of welding with a consumable electrode guide see Table 20.

Table 20

	Steels			
	Ст. 3; 20; 22К	30, 25К	Ст. 3; 20; 22К	30, 25К
Plate thickness, mm	100	100	100	100
Welding gap, mm	24	24	24	24
Wire grade	Св-10Г2	Св-10Г2	Св-10Г2	Св-10Г2
Wire diameter, mm	3	3	3	3
Cross-section of electrode guide, mm	500	500	420	420
Number of electrodes	3	3	2	2
Electrode speed, m/hr	120	100	144	120
Voltage, v	32	30	38	36
Current, a	1,200-1,400	1,050-1,300	900-1,150	800-1,050
Production rate, kg/hr	25	20.7	19.1	16
Welding speed, m/hr	1.3	1.1	1.0	0.85

6. Welding Technique with Large-size Electrodes

The parts to be welded with a plate electrode are assembled with a gap from 30 to 35 mm wide. Electrodes are cut out of sheet steel 8 to 12 mm thick. The width of the electrodes varies with the thickness of the workpiece. When the workpiece is 100 to 150 mm thick, welding is performed with one electrode equal in width to the thickness of the parts being welded. Heavier sections are usually welded with three plate electrodes. The width of each electrode can be found by deducting 20 or 30 mm from the thickness of the workpiece (or twice the distance between the electrodes) and dividing the difference by three (the number of electrodes).

The length of an electrode varies with the height of the weld. If the groove is 30 mm wide and the electrode is 10 mm thick, the length of the electrode will be three times the height of the weld, as the groove is three times the thickness of the plate electrode. Another 400 or 500 mm are added to the length of the electrode since the width of the groove varies with the height of the joint and some

electrode metal will go into the weld reinforcement. Prior to welding, plate electrodes are set in the middle of the groove so that the edges of the first and third electrodes are in line with the outer edges of the workpiece.

In welding with an oscillating wire electrode, the slag pool is heated unevenly, the most heated area being directly beneath the electrode. Receding from the electrodes, the temperature elsewhere in the slag pool becomes progressively lower, and the electrical conductivity of the slag pool is sharply reduced.

On the other hand, large-size electrodes produce a slag pool which is heated more uniformly. The stability of welding is enhanced to a point where lower values of current can be employed, and the voltage may be reduced from 30-55 v, as is the case with wire electrodes, to 20-40 v.

In welding with large-size electrodes the welding current is directly proportional to the cross-sectional area of the electrode and the rate at which the electrodes are fed into the slag pool. Therefore, the welding current may be anywhere between 1,500 and 2,000 a or more.

The electrode tip may be submerged in the slag pool fully or partially. In the latter case, the electrode is melted continuously, but not throughout the cross section at a time. The electrode area in contact with the slag, in this case, will be directly proportional to the electrode speed and inversely proportional to the welding voltage. Therefore, when voltage is increased too much or the electrode speed is too low, the electrode may burn. As has been found empirically, AH-8 flux ensures a stable welding without the burning of the electrode, using a current density of 0.5 to 0.6 a/sq mm or more. In other words, welding with a plate electrode measuring $100 \times 10 = 1{,}000$ sq mm will call for a current of at least 500 or 600 a. As with moving electrodes, so in welding with plate electrodes of large cross section penetration is governed mainly by the welding voltage, welding current and depth of the slag pool. The width of the weld is increased with the welding voltage. Plate electrodes heat the slag pool more uniformly, and the weld thus obtained with a constant gap and welding voltage is wider than in welding with a moving slender electrode. The effect of the welding voltage on the width of the weld may be illustrated as follows. Specimens of steel Ст. 3 100 mm thick were welded with plate electrodes 100×10 mm and AH-8 flux using 1,000 to 1,100 a, and a slag pool 25 to 30 mm deep; the reduction of the welding voltage from 34-36 v to 30-32 v reduced penetration from 70-72 mm to 63-65 mm.

An increase in the welding current, with the voltage remaining constant, reduces the width of penetration. The above-mentioned specimens show that an increase in welding current from 1,000 or 1,100 a to 3,000 or 3,200 a at 30 to 32 v reduced the width of penetration from 65 mm to 50-52 mm.

The depth of the slag pool has a more marked effect on the width of penetration in welding with plate electrodes than in welding with a slender wire electrode. When the slag pool is deeper than 35 or 40 mm, poor fusion is likely to occur. This is why the depth of the slag pool should be maintained within the prescribed limits, the optimal depth for plate electrodes being anywhere from 20 to 35 mm (for AH-8 flux).

When plain carbon steels are welded with plate electrodes of relatively small thickness (70 to 100 mm), the penetration is the shape of a barrel. In increased metal thicknesses penetration becomes more regular in section.

The slag pool being heated more uniformly along the joint, the depth of the slag pool in welding with plate electrodes may be less than in welding with fine electrode wire. The continuous and uniform heating of the metal pool on the surface is conducive to a fuller removal of gases from the molten metal and to sound welds.

7. Hard-facing by the Electric Slag Process

Hard-facing is a method of applying an alloy material to a metal part so as to form a protective surface to resist abrasion, corrosion, heat, and impact, or any combination of these factors. It saves expensive and scarce alloy materials and prolongs the service life of parts. The alloy may be applied to flat surfaces or to bodies of rotation. They may be small parts and large blanks. As the resultant surface is smooth and even, in many cases subsequent machining may be dispensed with.

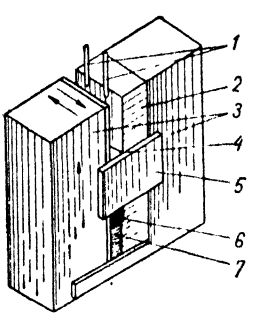

Fig. 99. Diagram of hard-facing of a flat surface in a vertical position in a chill by the electric slag process:

1—electrodes; *2*—blank to be hard-faced; *3*—chill; *4*—slag pool; *5*—copper moulding shoe; *6*—slag crust; *7*—deposited metal.

Hard-facing of flat parts. Flat parts may be surfaced by two methods: with the surface to be hard-faced placed (a) vertically, and (b) in the downhand position. In both cases the filler metal may be solid or sintered electrode wire, large-size electrodes, such as shapes, castings, ingots, etc.

The metal deposited in the vertical position can be shaped by a chill or by a split moulding shoe.

In the first case (Fig. 99) the part to be hard-faced is placed in an adjustable box-shaped chill lined with water-cooled copper plates. The space between the part and the chill varies with the thickness of the metal to be deposited and with the allowance for subsequent machining. The electrode holders move to and fro in the space and go up as the space is

filled with metal. The moulding shoes move together with the electrode holders, to prevent the slag and molten metal from overflowing.

The above-described scheme can also employ steel plates of the appropriate cross section and composition instead of electrode wire. Plate electrodes considerably simplify the equipment, as there is no need for the reciprocating motion of the electrodes.

With split moulding shoes, it is possible to hard-face both the entire surface and part of it. The alloy is deposited in the space between the part and the split moulding shoes which are locked together by a fish-mouth joint (Fig. 100). In hard-facing, the moulding shoes are held down to the workpiece by a special device and move up as the space is filled with metal. The electrode holders travel to

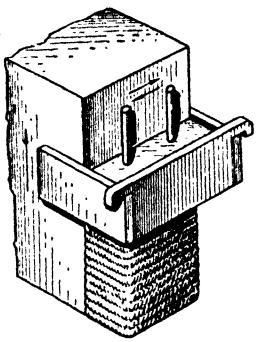

Fig. 100. Diagram of hard-facing of a flat surface in a vertical position by means of composite moulding shoes.

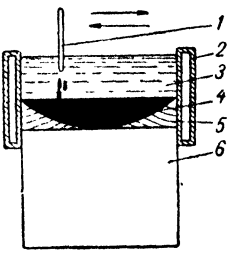

Fig. 101. Diagram of hard-facing of a flat surface in a downhand position by the electric slag process:

1—electrode; *2*—water-cooled copper strip; *3*—slag pool; *4*—metal pool; *5*—deposited metal; *6*—blank.

and fro in the space. Hard-facing is initiated on a steel or a graphite backing strip. Sometimes penetration in the initial stage may be poor; therefore, hard-facing is usually started in the slot of a starting tab or in a detachable chill.

Hard-facing is completed on a finishing tab or in a chill in order to bring the shrinkage hole outside the hard-faced part. The hard-facing conditons (the number of electrodes, current, voltage, rate of weaving motion of the electrodes, depth of the slag pool, etc.) are chosen depending on the thickness of the metal deposit and the grade of steel being hard-faced.

Fig. 101 shows a method of hard-facing flat surfaces with the electrode wire in the downhand position.

The built-up metal is moulded and the molten flux is retained by red copper plates 5 to 8 mm thick, attached to the sides of the workpiece. When hard-facing is performed at high values of current and

voltage, the plates must be water-cooled. The electrodes are made to swing across the entire width of the workpiece. The speed of weaving motion varies with the width of the surface to be hard-faced and the hard-facing conditions. It should be high enough for the electrode to return to the specified point before the deposited metal solidifies. Hard-facing proceeds most steadily when the slag pool is at least 30 mm deep. When the depth is reduced to 10 or 15 mm, the process becomes either an arc one or intermittent, and there may be poor fusion between the parent metal and the alloy applied.

Hard-facing is best performed in the upward direction, with the workpiece inclined at an angle of 3 to 5 degrees. When the alloy material is applied in the downward direction, electrode metal may not fuse with the parent metal, and the deposited metal may have slag inclusions. The width of the metal deposit may be increased by using a larger number of electrodes.

Hard-facing may be accomplished with conventional semi-automatic and automatic welding machines fitted with a mechanism imparting the electrode weaving motion.

Hard-facing with a large-size electrode. Many high-alloy steels and alloys are extremely difficult or impossible to make into coils of wire, as required for automatic hard-facing. Sometimes solid wire may be replaced by sintered electrode wire. However, both solid and sintered electrode wire is scarce and expensive to a degree where its use may be out of the question in many applications.

An alternative is provided by large-size electrodes. The point is that the cost of a hard-facing material is reduced as the cross-sectional area of the electrodes of this material is made larger. Besides considerations of cost, large-section electrodes make it possible to operate on considerably higher values of current and thus to increase the production rate.

In hard-facing with electrode wire the production rate can be increased by using a large number of electrodes. This, however, complicates beyond proportion the construction and operation of hard-facing apparatus.

The use of fluxes of low oxidising properties reduces the burning losses of alloying materials to a minimum and makes it possible to employ plate electrodes made of standard grades of steel.

Flat surfaces can be successfully hard-faced by a technique developed by the Electric Welding Institute and employing a large-size electrode. The technique will be clear by reference to Fig. 102. A piece of conductive AH-25 flux is placed between the part to be hard-faced *5* and the alloying electrode *1* made of a rolled shape or a casting of the appropriate analysis. This is necessary in order to establish a path for the initial flow of welding current. The surface to be hard-faced is then sprayed with ground fluorspar or any other flux

with which the hard-facing process will be stable, and the current is turned on. The current passing through the "fuse" of flux melts it and the fluorspar, and the electric slag process is initiated. The heat of the molten slag *2* sweats the surface of the workpiece and melts the electrode. A water-cooled copper chill *3* retains the molten slag and metal. The droplets of electrode metal flow and spread on the sweating surface of the workpiece and fuse with it to form a metal pool *4*. The electrode is fed into the welding zone as it melts.

The technique is remarkable for a reliable union between the deposited and parent metal and a high production rate. As has been found experimentally, the hard-facing rate is 18 g/a-hr at a current density of 0.1 a/sq mm. Operating on a current of 5,000 to 6,000 a, it is possible to apply up to 100 kg of metal an hour.

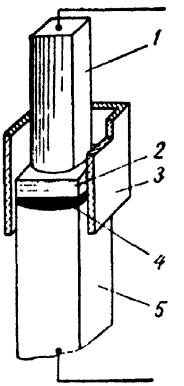

Fig. 102. Diagram of hard-facing with an electrode of large section by the electric slag process.

If the fusion between the electrode and parent metal is to be thorough, the cross-sectional area of the electrode should be about the area of the surface to be hard-faced. When the area of the surface to be hard-faced is greatly in excess of the cross-sectional area of the electrode, complete fusion can be obtained either by employing an electrode of a variable cross section or by preparing the surface to be hard-faced accordingly (Figs. 103*a* and *b*). It is a good practice to preheat the workpiece and to use ground fluorspar as flux, as it has a very low viscosity and high fluidity at the temperature of hard-facing.

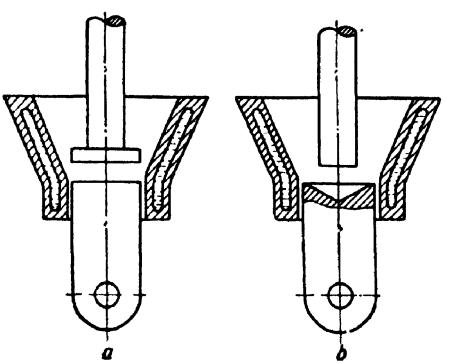

Fig. 103. Techniques giving full penetration on lower edge when there is abrupt change in section of electrode and blank: *a*—electrode of variable section; *b*—preparation of workpiece for hard-facing.

Hard-facing of bodies of rotation. The electric slag process can be employed to hard-face the outside and inside surfaces of cylinders and cones.

Cylinders 200 to 250 mm high can be hard-faced in a water-cooled copper chill (Fig. 104) provided the deposited metal is not less than 14 to 16 mm thick. The chill is slightly tapered so that the workpiece may be easily pulled out of it.

The workpiece is fastened in the chill so that a uniform space is left all the way round the cylinder. Hard-facing is initiated on graphite or steel strips. After a slag pool is obtained, both the work and

the chill are rotated at an equal speed. As the space fills with deposited metal, the electrode holders move up. The number of electrodes and hard-facing conditions vary with the diameter of the workpiece and the width of the space. When the workpiece is, say, 200 mm in diameter and the space is 20 mm wide, four electrodes may be recommended, with 250 or 300 a per electrode. If the work is 300 mm in diameter, there should be six electrodes.

An increase in the speed of the work decreases penetration. For a given current, voltage, depth of the slag pool, number of electrodes, etc., the speed is found by trial and error, so that penetration be uniform and reliable to a depth of 2 or 3 mm.

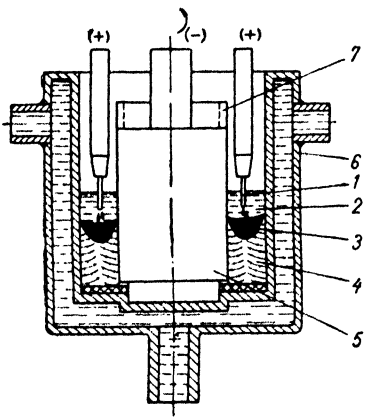

Fig. 104. Hard-facing the outside surface of a short cylinder by the electric slag process:

1—electrode; *2*—slag pool; *3*—metal pool; *4*—deposited metal; *5*—blank; *6*—copper chill; *7*—finishing ring.

Tall cylinders can be conveniently hard-faced by the technique shown in Fig. 105.

Hard-facing is started either on strips or in an external chill. The metal deposit is shaped by a water-cooled annular copper moulding shoe with the work either stationary or rotating. In the first case, the moulding shoes move from the bottom up, and the electrodes are driven in a weaving pattern to trace out an arc of a circle. When the work is rotated, the moulding shoe and electrodes are stationary, and the work proceeds downwards as it is being hard-faced.

The speed and swing of the electrode holders (or the rotational speed of the work), the current, voltage, depth of the pool, etc., vary from case to case and depend on the diameter of the workpiece, the width of the gap and the composition of the metal applied. Hard-facing is completed on a finishing ring attached to the work.

Cylindrical surfaces can also be hard-faced with plate, odd-shaped, and tubular electrodes.

The hard-facing technique is complicated when an alloy has to be applied to the workpiece which is a body of revolution of variable diameter and space width.

Fig. 106 shows the hard-facing technique that is applicable to a cone-shaped workpiece. The workpiece, which may be of carbon or low-alloy steel, is mounted in an adjustable holder and is placed in a water-cooled copper chill so as to obtain a uniform space all the way round the workpiece. The electrode holders are positioned in the space to run parallel to the surface of the chill.

Hard-facing should be started with one electrode. Both a. c. and d. c. may be employed. D. c. power may be supplied simultaneously to several electrodes connected in parallel (the split-electrode technique). With a. c. and with the number of electrodes the multiple of three, a three-phase power supply is advisable.

Hard-facing with one electrode is carried on until enough flux has been melted (i. e., for 3 or 4 minutes). In the meantime, both the chill and the work are rotated intermittently. After 3 or 4 minutes, the other electrodes go into action. When hard-facing reaches a steady

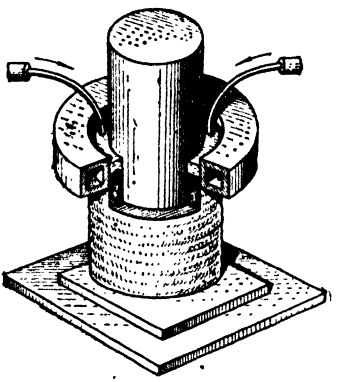

Fig. 105. Hard-facing outside surface of tall cylinder by the electric slag process.

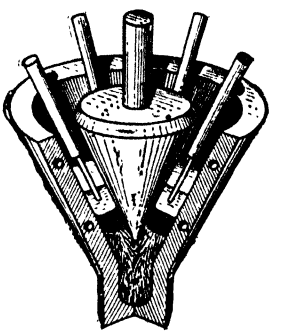

Fig. 106. Hard-facing a cone-shaped workpiece by the electric slag process.

state condition, the work and the chill are rotated in synchronism. In the beginning, when the alloy is being applied to the part of the work of smaller diameter, the voltage should be reduced so as to obtain shallower penetration. Conversely, on the larger section of the work the voltage is increased to avoid slag inclusions and poor penetration. This is done by increasing the no-load voltage of the generator or by reconnecting the taps of the transformer.

As the diameter of the work increases throughout the hard-facing operation, the volume of the slag pool also rises. Therefore, flux should be added to the pool at regular intervals throughout the entire cycle.

Table 21 suggests the conditions for hard-facing a cone-shaped work with a maximum diameter of 170 mm and a slant height of 150 mm. The space between the work and the chill was 14 to 18 mm. Other conditions were: direct current, reversed polarity; ПП-Х12ВФ sintered electrode wire 2.8 mm dia; АН-22 flux.

The hard-facing time was 35 minutes; wire consumption, 6 to 6.5 kg; flux consumption, 1.2 to 1.4 kg. The deposited metal had an analysis close to steel Х12ВФ.

Table 21

Lapsed time, min	Total current, a	Welding voltage, v	Number of electrodes	Depth of slag pool, mm	Speed of work and chill, r.p.m	Dry length of electrode, mm
3	220-250	30-32	1	50	2	45
15	840-860	32-34	3	40	2	40-50
30	820-840	34-35	3	25	2	50

When hard-facing high-alloy steels by the electric slag process, the deposited metal often differs sharply from the parent metal. Dilution of the high-alloy electrode metal can be reduced by keeping the depth of penetration at a minimum (3 or 4 mm). If penetration is to be maintained constant, other hard-facing conditions, such as current, voltage, depth of the pool, and the location of the electrodes relative to the surface of the work, should also be kept constant.

The depth of penetration may be reduced by lowering the voltage, by withdrawing the electrode away from the surface of the work, and by increasing the rotational speed of the work or the speed of the weaving motion of the electrodes.

When using sintered electrode wire, one should remember that it is strain-hardened in drawing, and will "wag" on leaving the guide tip. This cannot be tolerated, especially when the space between the work and the chill is small, because otherwise penetration will not be uniform. The electrode tip can be accurately positioned by fitting special bushes to electrode guides, or by operating, when possible, on short "dry" lengths (20 to 30 mm).

8. Electric Slag Welding in Repair of Thick-walled Articles and Machine Parts

Apart from the fabrication of large weldments, electric slag welding is widely used for the repair of thick-walled articles and machine parts.

The type of welding equipment used in repair work varies widely with the range of repair involved. Most common are the A-372M and the A-372P welding sets.

The simplest case of repair work convenient for electric slag welding is the plugging of redundant or out-of-size through holes in heavy sections (Fig. 107). The hole to be plugged should be placed so that its axis be vertical or almost vertical. In this case, no weld-moulding devices are necessary, except for a bottom attachment in the form of

a welded-on sleeve or chill. The diameter and depth of the hole may vary within broad limits. Plugging may be done with one or several wire electrodes, with a large-section electrode, or with round or square rods. When the hole is deep (over 100 to 150 mm) and wire electrodes are used, the electrode guide is introduced into the hole. When the hole is shallow, it may be plugged without introducing the guide into the hole; however, the dry length of the electrode should be great. The welding conditions should be chosen on a trial workpiece, as they vary with the size of the hole and with the welding equipment available.

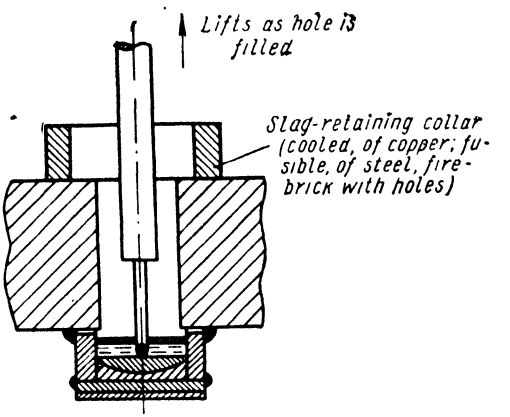

Fig. 107. Plugging a through hole by the electric slag process.

An example in point is provided by a rolling mill cushion weighing 16.8 tons and cast of steel 25Л. A crack was detected in the cushion, running across the thickness of the part (or 500 mm at that place) on the inside cylindrical surface (Fig. 108).

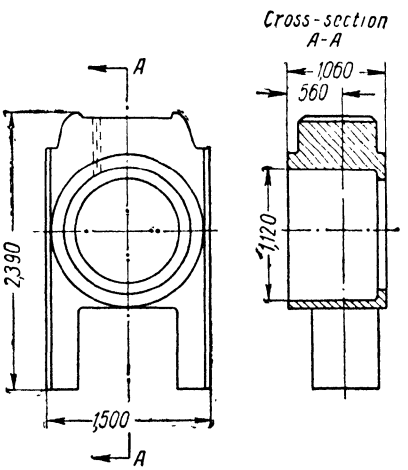

Fig. 108. Crack in the bedplate of a rolling mill stand.

The crack was grooved for welding by flame gouging. The resultant groove was 50 to 150 mm wide and was then widened to 160 mm on a boring machine. Had the groove been welded in a single pass, a prohibitive amount of electrode metal would have had to be deposited. To avoid that, a strip of steel Ст. 3 was inserted in the groove. The strip was 100 mm thick, as wide as the part itself at the point of welding, and as high as the cushion (Fig. 109). At first, the strip was welded to one edge and then, by another weld, to the other edge.

To make the part at the point of welding rectangular in cross section—which is most convenient for electric slag welding—strips 80 to 100 mm wide were welded to the top and bottom of the cushion

(Fig. 109). The gap on the inside was closed by a fusible steel backing strip over the entire height, while on the outside the gap was left open to be closed only in welding by strips 100 to 120 mm as it was being filled. Starting tabs were welded at the bottom of the gap.

The two welds between the inserted strip and the edges were made with an A-480 welding unit, with the workpiece mounted on a floor slab. The plate electrodes employed were made of a low-alloy steel (0.1 per cent C; 1.05 per cent Mn; 0.98 per cent Si; 0.33 per cent Cr; 1.19 per cent Ni; 0.02 per cent S; and 0.026 per cent P). The cross section of the plate electrode for the first weld was 150× × 12 mm, and for the second weld, 163 × 12 mm. The flux was AH-8, and the work was preheated to 100 or 120° C with producer gas.

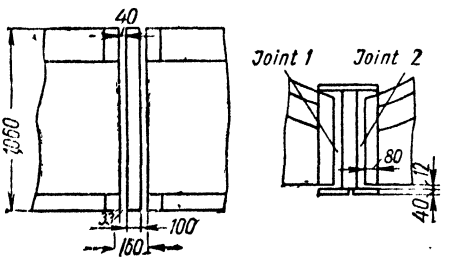

Fig. 109. Bedplate prepared for welding.

Prior to making the second weld, the workpiece was reheated with gas torches. Actually, the heat was limited to the place opposite to the slot being welded, so as to widen the gap before making the second weld and to relieve the contraction stresses which had set in after the first weld.

The other welding conditions were: electrode speed, 1 m/hr; current, 1,200 a; voltage, 35-37 v; number of electrodes, 3.

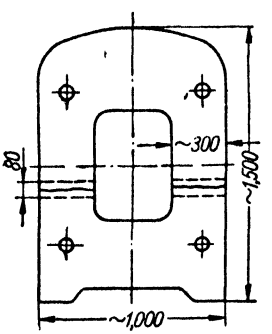

Fig. 110. Crack in the frame of a shearing press.

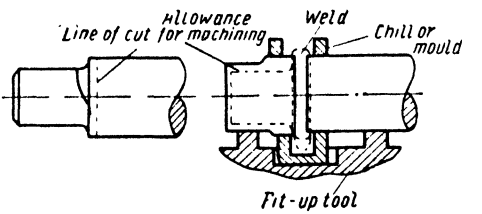

Fig. 111. Repair of a cracked shaft by electric slag welding.

After welding the workpiece was tempered at 550-600°C.

Inspection showed that after repair the dimensions of the cushion were within machining allowances.

In another case, two cracks developed in the frame of a shearing press (Fig. 110). The frame was cast of steel 45JI and the cracks were of rectangular cross section 300 mm by 80 mm.

Prior to welding, the places to be welded were milled to a depth of 40 mm so as to remove crack-affected metal. Then the milled faces were built up to the original dimensions with an automatic three-

electrode welding set (Type A-420). After the deposited metal had been machined, the frame was lined-up for electric slag welding on a floor slab and the parts were reliably clamped in place. The clearance between the abutting members was 30 mm prior to welding, and the edges were given a preheat of 100°C.

The welds were made with an A-372M welding set employing three stationary electrode guides. The electrodes were Grade Св-10Г2 wire, and the flux was AH-8. The other conditions were: electrode speed, 200 to 220 m/hr; current, 400 to 450 a; voltage, 46 to 48 v.

After welding the frame was normalised and tempered. The reconditioned frame is still in service.

In a third case, a crack was detected in the trunnion of a shaft 200 mm in diameter, cast of steel 30 (Fig. 111). The trunnion was cut off along the crack, and a new trunnion was made. The new trunnion and shaft were then lined-up in a jig so that a clearance of about 30 mm was left between the abutting members. The weld was shaped by a chill made of sheet copper and fitted with pipes for cooling water. The chill had a pocket 60 to 80 mm deep in the bottom. The top of the chill was constructed so as to bring the welding crater outside the critical portion of the part. The welding machine was the A-372M set. In fact, any welding set, including portable welding heads, may be employed for the purpose. The copper chill may be replaced by steel flanges. When the work is of carbon steel Св-10Г2 and Св-10ГС electrode wire and AH-8 flux may be used.

In a similar case, a crankshaft 360 mm in diameter made of steel 40X had to be extended by welding to it two pieces each 400 mm long. Prior to jigging, square flanges measuring 420 × 400 × 40 mm were tack-welded to the end faces of the shaft and extension pieces, so as to make the cross section of the weld rectangular, i. e., more convenient for electric slag welding. The weld was made by an A-372M welding set, using a fusible steel backing strip, Св-10ГС electrode wire and AH-8 flux. Св-10ГС electrode wire was used in order to obtain a full-strength weld. Prior to welding the parts were given a preheat of 100°C.

The other welding conditions were: electrode speed, 165 m/hr; current, 300 to 350 a; voltage, 48 to 50 v; number of electrodes, 3.

After welding the crankshaft was normalised and tempered.

The inspection of a trial specimen welded by the same technique showed that the weld metal was free of any defects; the mechanical properties of the weld metal were as specified; the ultimate strength being 69 kg/sq mm, and the impact toughness, 4.9 kgm/sq cm.

The shaft of a turbo-alternator unit for the Kakhovka Hydropower Station was rejected as being 100 mm too short. It was however reclaimed by welding on a ring 100 mm wide and of the shaft's diameter. Both the shaft and ring were made of carbon steel 45. In view of the high carbon content of the steel, the ring and shaft were preheated to 200°C. The welding technique and procedure were similar to

those employed when making circular welds on the shafts of the turbo-alternator units for the Varvarino Hydropower Project.

The weld was made by a special-purpose welding set incorporating an A-401 apparatus. The electrode wire was Grade Св-10Г2, and the flux was AH-8. After welding, the shaft was heat-treated. Test plates welded by the same technique demonstrated the high quality of the welded joint.

9. Defects in Electric Slag Welds

Defects in electric slag welds are likely to develop when the proper welding conditions or procedures are not observed.

Crystallisation or hot cracks in the weld metal. The resistance of the weld metal to crystallisation cracks depends on:

(1) The magnitude and nature of the tensile stresses setting in due to ununiform heating. Stresses are inevitable in any welding process, and their control presents a hard problem. Therefore, crack control through stress control is of limited use.

(2) The chemical analysis of the weld metal, which, in turn, depends on the composition of the parent metal and electrode metal, their proportion in the weld metal, and the metallurgical reactions between the metal and the slag.

With structural carbon and low-alloy steels, the governing factor is the carbon content (Table 22).

Table 22

Group of experiments	Parent metal	Percentage content					Cracking
		C	Mn	Si	S	P	
I	Ст. 3	0.12	0.45	0.05	0.048	0.026	No
	20Л	0.11	0.44	0.03	0.040	0.025	No
	40	0.20	0.44	0.04	0.045	0.027	Yes
II	Ст. 3	0.16	1.22	0.13	0.031	0.035	No
	20Л	0.15	1.23	0.10	0.028	0.030	No
	40	0.24	1.20	0.12	0.030	0.32	Yes

(3) The pattern of growth and encounter of columnar crystals (see Chapter II). The governing factor here is the shape of the weld pool, which mainly depends on the electrode speed (current value) and the metal thickness per electrode. The shape of the weld pool is fully described by the aspect ratio of the weld (see Chapter II). Welds of a low aspect ratio show a low resistance to crystallisation cracks even in the case of lower carbon content (see Chapter VIII).

Table 23

Group of experiments	No. of weld	Electrode speed, m/hr	Percentage content					Cracks	Aspect ratio
			C	Mn	Si	S	P		
I	1	180	0.21	1.09	0.22	0.034	0.031	No	2.5
	2	500	0.16	0.69	0.11	0.030	0.033	Yes	1
II	3	180	0.23	1.38	0.17	0.029	0.032	No	2.8
	4	400	0.19	1.42	0.18	0.026	0.034	Yes	1.3

It should be noted that welds of a very high aspect ratio (more than 15 : 1) also offer poor resistance to crystallisation cracks. Such ratios are encountered in hard-facing with a ribbon electrode. The crystals in this case grow parallel to one another (Figs. 112*a* and *b*). Cracks run between the side faces of adjacent crystals (Fig. 112*b*).

Table 23 illustrates the effect of electrode speed on the resistance of the weld metal to crystallisation cracks.

The conclusions that can be drawn from the above said are:

(a) The carbon content of the weld metal alone is not indicative of its susceptibility to cracking;

(b) The critical carbon content of the weld metal, as in arc welding, is governed by the orientation of the crystals;

(c) The likelihood of crystallisation cracks developing in the weld increases with the elec-

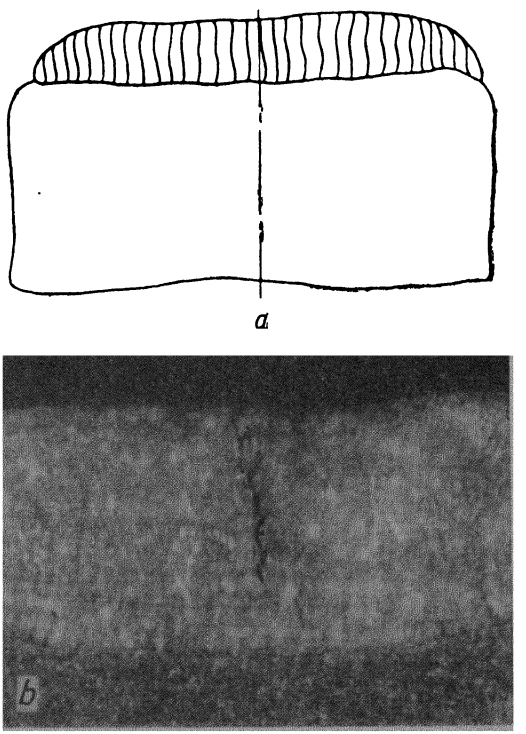

Fig. 112. Flat shape of metal pool:
a—growth of crystalline grains; *b*—crack in weld.

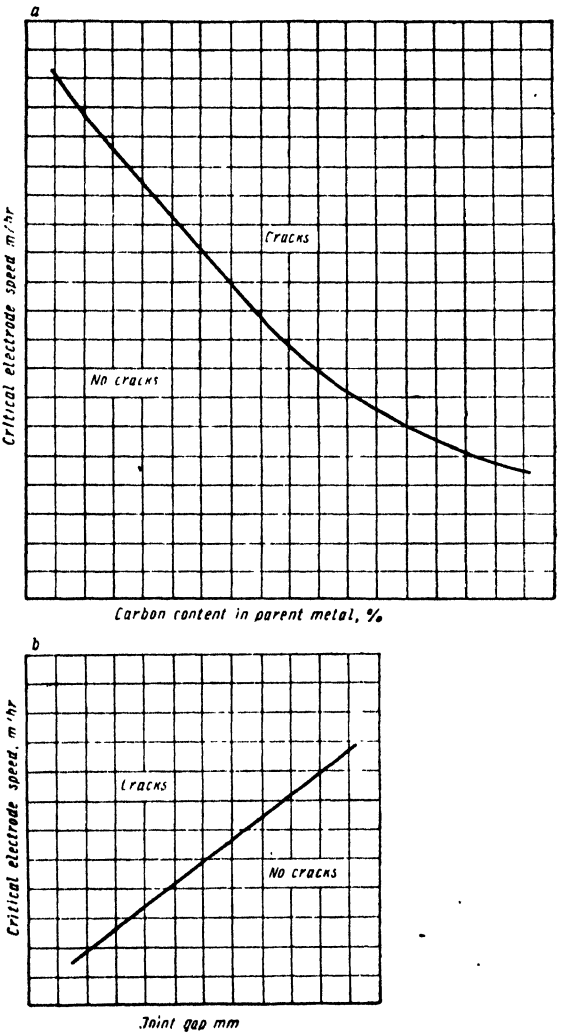

Fig. 113. Critical welding speed plotted against:
a-carbon content in parent metal (schematic presentation);
b—joint gap (schematic presentation)

trode speed, even though the deposited metal is low in carbon;

(d) As the carbon content in the parent metal increases, the resistance of the weld metal to cracking can be enhanced by reducing the rate at which the electrode is fed into the slag pool (see Fig. 113*a*);

(e) The critical electrode speed may be increased on wider clearances between the abutting edges (Fig. 113*b*) without affecting the welding speed.

As can be seen from Fig. 113, a decrease or increase in the gap does not affect welding speed.

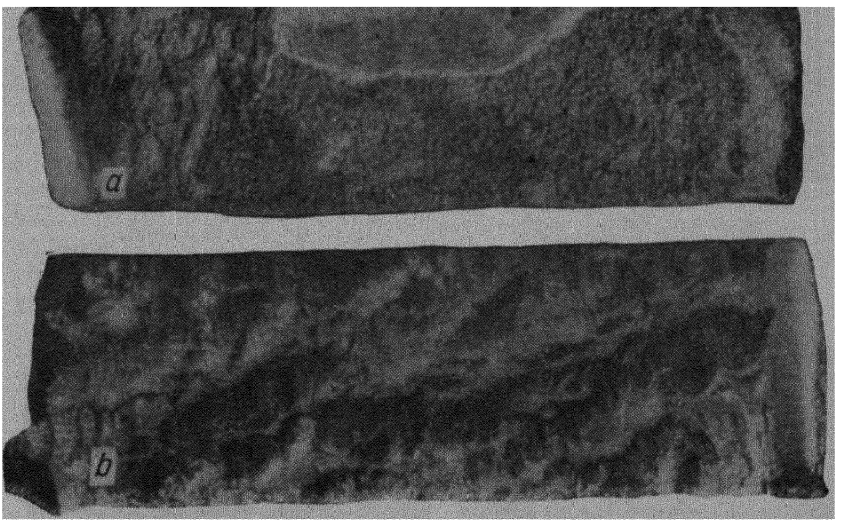

Fig. 114. Weld fractured along crack:

a—fracture along crack running along axis of weld between ends of dendrites (magnification×3), *b* fracture along crack running between branches of dendrites (magnification×3).

Cracks in electric slag welds run, as a rule, in the middle of the weld, without extending to its surface. The surface of cracks is almost colourless. The fracture of a crack developing along the axis of the weld is smooth and homogeneous (Fig. 114*a*). Sometimes the surface of the fracture may be coated by a thin film of slag flowing into the gap between the crystals. A crack developing between the branches of adjacent dendrites shows a serrated fracture (Fig. 114*b*) of a dark colour. Under all conditions of welding, there will be cracks and shrinkage holes at the end of welds (Fig. 115). This is why, as is emphasised in Chapter II, the weld should be completed 80 to 100 mm out of the joint on a finishing tab or in an auxiliary pocket of the moulding shoe.

Cracks often appear when closing circular welds. They may be prevented, however, by preheating the work to 200° C.

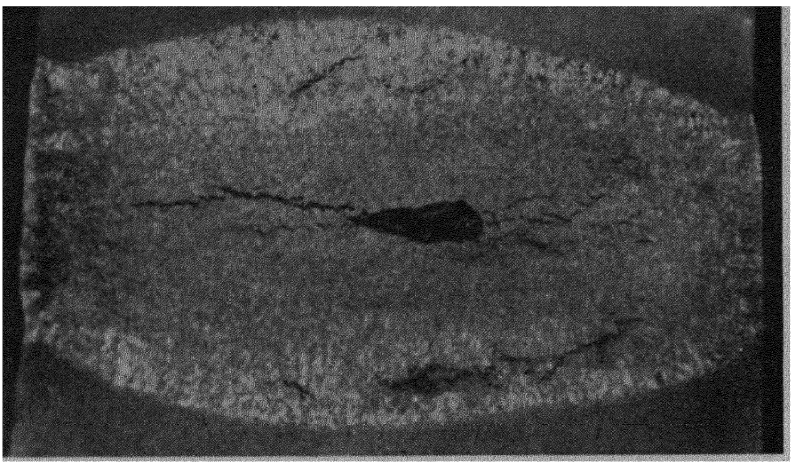

Fig. 115. Cracks and shrinkage cavity at the end of a weld.

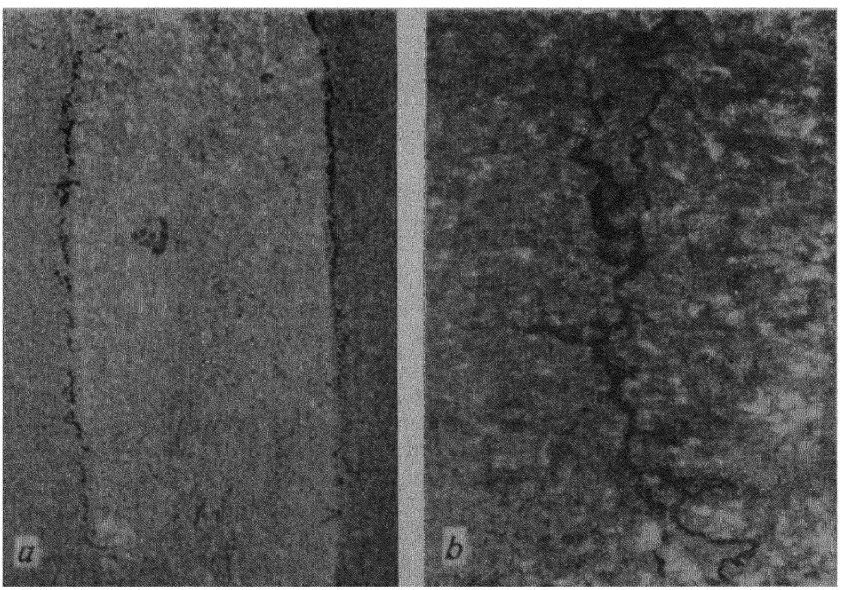

Fig. 116. Cracks in the near weld zone.
a—magnification ×1, *b*—magnification ×8

Another cause of cracks at the end of welds is an interruption of the welding operation. For this reason, before picking up the weld it should be chipped out at the spot where it had been abandoned. In critical parts, the whole of the abandoned weld has to be removed.

Cracks in the near-weld area. The near weld area may be affected by both cold cracks and crystallisation cracks.

The mechanism of cold cracking in special steels is discussed in Chapter VIII. Crystallisation cracks may result from shallow penetration or from sharp changes in the depth of penetration. The cracks run, as a rule, 1 to 1.5 mm from the line of fusion (Figs. 116*a* and *b*) and do not extend, in most cases, to the surface of the work. One end of the crack usually reaches into the weld metal (Fig. 117). Such cracks can be avoided by obtaining sufficiently deep penetration (at least 4 or 5 mm). In welding, watch should be kept on the welding conditions and the symmetrical position of the electrode in the groove.

Fig. 117 Crack extending from the near weld zone into the weld metal (×8).

Gas pockets in the weld metal. In slag welding the weld metal is less likely to develop holes than in arc welding. This is due to the specific conditions under which the metal pool solidifies in electric slag welding (see Chapter III). Holes vary in size, from microscopic ones to 5 or 7 mm in diameter. They may be distributed over the cross section of the weld at random or concentrate at the points of encounter of columnar crystals (Fig. 118), but they never appear on the surface of the weld.

Gas pockets may take the form of pipes extending for a great length through the centre of welds.

The causes of gas pockets may be scale left on the edges of the workpiece when it was forged; wet or dirty flux; deviations from the specified chemical analysis of the weld, especially reduced silicon and manganese content; wrong electrode wire; or reduced penetration.

Slag inclusions. Slag inclusions of a round shape usually concentrate on the edges of the workpiece where the width of penetration was sharply changed, while slag streaks occur between the parent metal and the weld metal when there is no fusion between them (Fig. 119). The difference between this type of poor fusion and poor penetration is that in poor penetration the parent metal was not melted, and the

weld metal simply filled the groove. In poor fusion, the parent metal was melted to a sufficient depth, but did not merge with the weld metal. Slag inclusions in the case of poor fusion are due to too deep a slag pool, refractory flux, or increased heat conductivity of the parent metal.

Similar defects may be observed when there are local deep undercuts on the edges of the workpiece. Slag inclusions along the axis of the weld may occur only when the weld was stopped for any reason and then restarted.

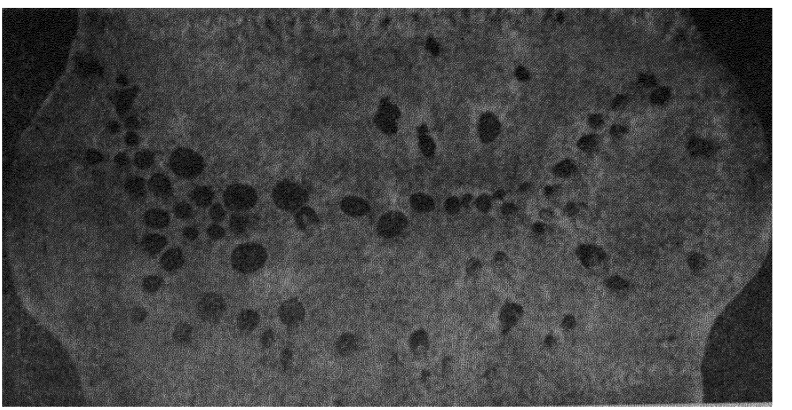

Fig. 118. Gas pockets in the weld metal.

When the electrode speed is too high or the "dry" length of the electrode is too great, the weld metal may have metallic inclusions which are pieces of unmelted electrode wire.

Porosity along the axis of the weld. Porosity of this type is due to shrinkage, usually at the end of welds. Sometimes this term is applied to lengths of welds affected by crystallisation cracks grouping along the axis of the weld.

Poor penetration and fusion. The following types of poor penetration and fusion are likely to occur in electric slag welding:

Poor penetration on both edges (Fig. 120) due to the narrow width of the weld which may in turn be occasioned by a low welding voltage, excessive electrode speed, or excessive metal thickness per electrode. A sharp increase in the depth of the slag pool may also result in poor fusion. This defect usually occurs at the beginning of a weld, when the steady-state condition has not been achieved yet. For this reason, as was emphasised in Chapter II, the weld should be started on starting tabs.

Poor penetration on one edge (Fig. 121) due to the fact that the

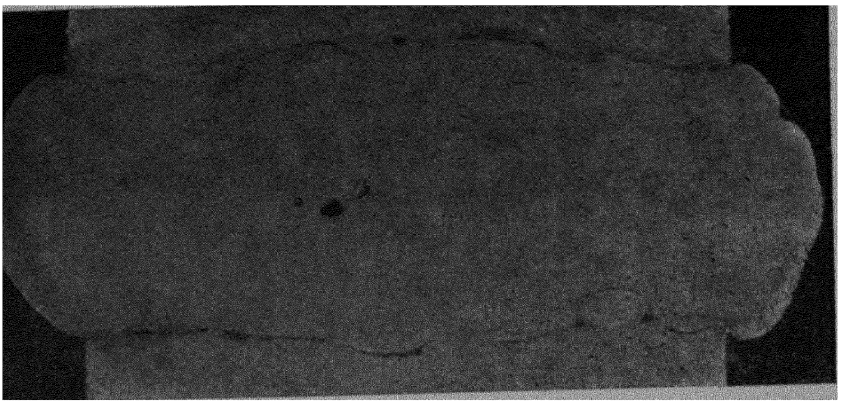

Fig. 119. Slag inclusions at line of fusion.

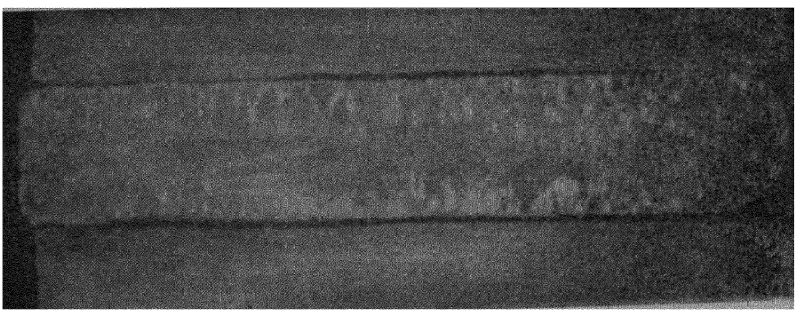

Fig. 120. **Poor penetration at both edges.**

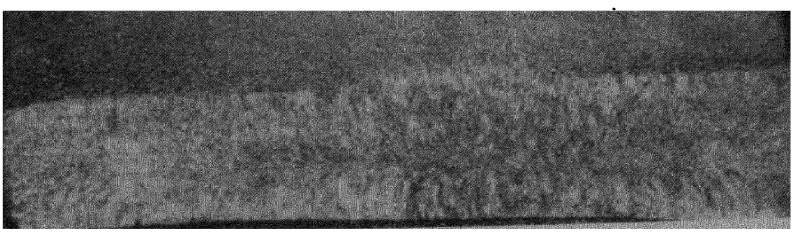

Fig. 121. Poor penetration at one edge.

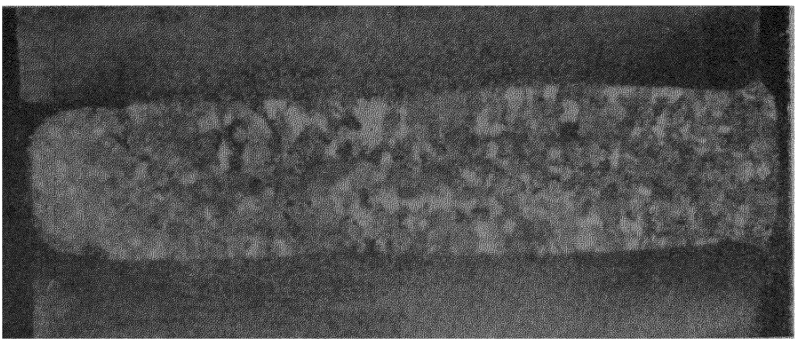

Fig. 122. Poor penetration at the surface of plates.

Fig. 123. **Asymmetrical** penetration

electrode is positioned off-centre in the groove. Therefore, in narrow joints the electrode must be positioned with higher accuracy.

Poor penetration near the surface of the workpiece (Fig. 122) may be occasioned by an increased distance between the moulding shoe and the electrode in an extreme position; too short a dwell of the electrode near the moulding shoe; and a decreased voltage at one of the electrodes due to unbalanced load on the power-supply line. When the voltage at adjacent electrodes is different, there may be uneven penetration (Fig. 123). When the electrode is made to stay at the moulding shoe for too long a time, there may be expanded penetration (Fig. 124).

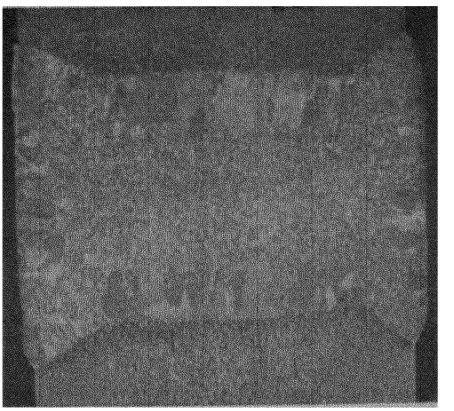

Fig. 124. Expanded penetration at moulding shoes.

Poor penetration in the middle of the weld (across the thickness of the workpiece) in welding with two electrodes (Fig. 125) and in *every third of the weld's length* in welding with three electrodes may result if the distance between adjacent electrodes is too great. If the distance is too short, there will be expanded penetration in the middle of the weld (Fig. 126).

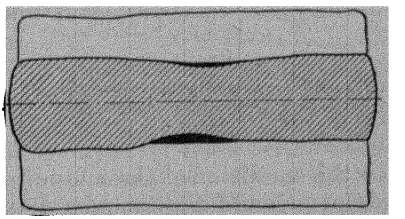

Fig. 125. Poor penetration at the middle of a weld

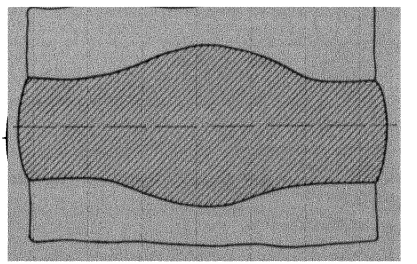

Fig. 126. Sharply expanded penetration at the middle of a weld

Electric slag welds may suffer also from *surface defects.* These are (a) *undercuts* of the parent metal due to excessive penetration at the surface of the workpiece because of an increased welding voltage, too long a stay of the electrodes at the moulding shoes or poor cooling of the moulding shoes; (b) *overlaps* (Fig. 127*a*) occurring when the moulding shoes are not held tight to the workpiece or when the groove in the moulding shoe is wider than the width of penetration. Should the weld be wider than the groove in the moulding block, pits will form on the surface of the

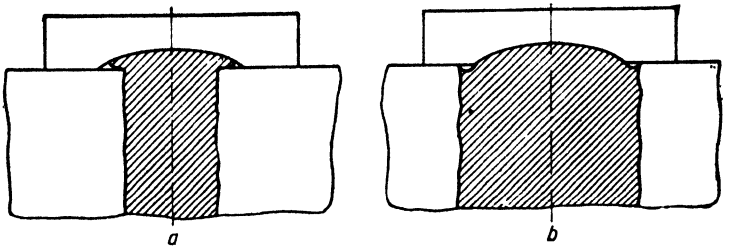

Fig. 127. Surface defects of welds.

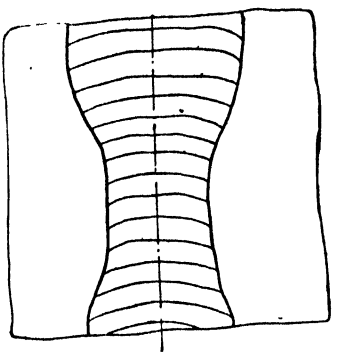

Fig. 128. Variations in the width of a weld near the surface of plates.

workpiece (Fig. 127*b*); (c) *irregular ripples* on the weld due to poor cooling of the moulding shoes, unsteady welding conditions, or too low a weaving speed of the electrodes; (d) *variations in the width of the weld* (Fig. 128) due to fluctuations in the welding voltage, changes in the welding speed (in the absence of automatic speed control) or changes in the distance from the electrode in the extreme position to the moulding shoe.

Rough spots on the surface of welds may appear if there are defects on the surface of the moulding shoes. Therefore, a constant check should be kept on the condition of the moulding shoes, and any rough spots on their surface should be removed immediately.

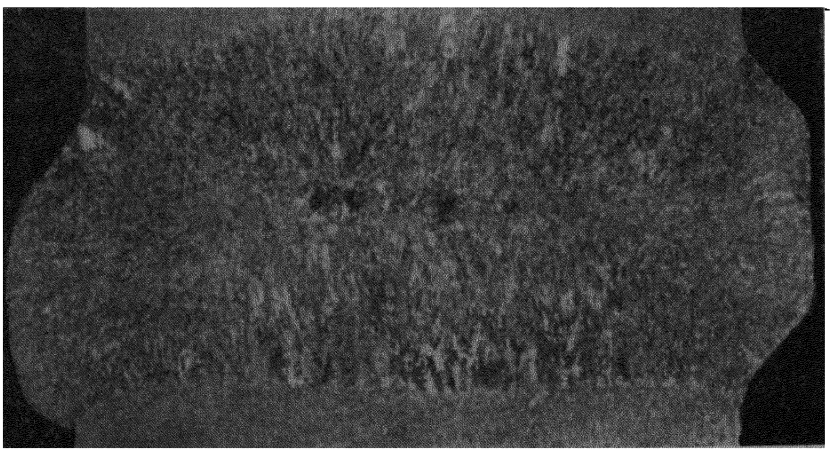

Fig. 129. Defective reinforcement.

If the moulding shoe is poorly cooled or the distance between the electrode in the extreme position and the shoe is too short, the shoe may sweat, and some copper may get into the weld to form shallow cracks on the surface of the weld.

Distorted reinforcement may occur in welding with plate electrodes at high values of current (upwards of 3,000 a), when the current is carried only to one of the two parts being welded (Fig. 129).

10. Weld Inspection and Testing

Inspection and testing in all stages of welding is essential, if the welds made by the electric slag process are to be sound. Special emphasis should be placed on the joint gap, the alignment of the edges, the finish of the surfaces to be traversed by the moulding shoes, etc., and the welding conditions specified.

The quality of the source materials has a direct bearing on the quality of the welded joint. Therefore, inspection should cover the parent metal, electrode metal and flux. This also applies to the condition of the welding equipment, instruments, power sources, moulding shoes and back-up strips, water-cooling systems, etc.

Last but not least, inspection should cover the quality of the finished product.

Defects that may be encountered in electric slag welds are: (a) undercuts of the parent metal due to inadequate welding conditions, or the difference between the width of the weld and the groove in the moulding shoe or back-up strip; (b) overlaps; (c) poor penetration; (d) poor fusion; (e) gas pockets in the weld metal; (f) coarse slag inclusions; (g) hot or cold cracks in the weld metal; (h) cracks in the near-weld area.

Poor penetration, cracks, gas pockets and slag inclusions are mostly concealed inside the weld, though they may crop up at times at the surface. Therefore, visual inspection of a welded joint should precede all other forms of inspection. The immaculate appearance of a welded joint, however, does not at all indicate that there are no defects inside the weld. This is where various tests designed to detect hidden faults are resorted to, especially when the work is intended for critical applications.

Test techniques may be classed into two broad systems: non-destructive methods (X- and gamma-rays, ultrasonics) and destructive methods.

X- and gamma-rays permit testing of welds and parent metal for gas pockets, inclusions, poor penetration or fusion, cracks, etc. The resolving power of a particular technique, that is the size of the smallest defect (placed at a right angle to the path of rays) discernible with its aid is expressed in per cent of metal thickness. For steels less than 50 mm thick the resolving power of X-ray testing is 1.5 to

2 per cent. For thicknesses of the order of 100 mm, the resolving power is about 2 per cent for both X-rays and gamma-rays. In other words, a defect measuring 2 mm can be detected in a weld 100 mm thick. If the radiation source is radioactive cobalt Co-60, thicknesses up to 250 or 300 mm can be inspected by this technique.

Where thicknesses are upwards of 100 or 120 mm, the only reliable technique applicable to welds is ultrasonic testing.

Many engineering works in the Soviet Union inspect their electric slag welds with the ultrasonic reflectoscopes developed by the Central Heavy Engineering Research Institute (the УЗД-7Н, the УДЦ-10, etc.). By way of example, the Novo-Kramatorsk Engineering Works employs ultrasonic inspection to test welded parts of powerful hydraulic presses made of carbon steels (flat welds on vertical members, circumferential welds on power cylinders, etc.). The Barnaul Boiler-Making Factory resorts to ultrasonic inspection for defects in longitudinal and girth seams of boiler drums and other high-pressure vessels.

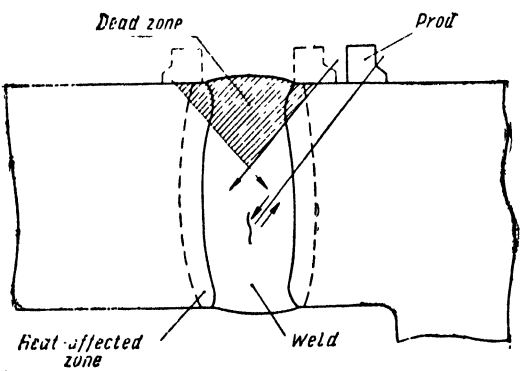

Fig. 130. Diagram of ultrasonic quality inspection of a butt weld.

The advantage this method offers is above all the possibility to examine welds 500 mm or more thick, and accurately locate and measure defects. As distinct from X- or gamma-rays, which pass through the workpiece only in one direction, transverse waves of ultrasonic frequency can be sent through the work at various angles to the surface of the joint and the axial plane of the weld. In this way, defects not always discernible to X- or gamma-rays (such as poor penetration or fusion, axial hair cracks, etc.) may be revealed.

The inclined reflectoscopes employed in weld inspection send out ultrasonic waves at an angle of 30, 40 or 50° from the vertical. An inclined reflectoscope is both a transmitter and a receiver of ultrasonic waves. Its advantages compared with a straight reflectoscope are: inspection of welds without the removal of their reinforcement, and reliable detection of axial cracks and poor penetration usually found in the plane of symmetry of welds. With inclined reflectoscopes, however, ultrasonic pulses have to cover longer distances and much of their power is dissipated by elastic heterogeneous structures (Fig. 130). Besides, if a workpiece can, for some reason, be inspected only on one side of the weld, there forms what is known as the dead area, which

can be reached only by special methods. The size of the dead area is directly proportional to the width of the weld reinforcement and inversely proportional to the angle of entry of ultrasonic waves.

Ultrasonic inspection is remarkable for its high resolving power which is expressed in terms of the surface area of the smallest defect which can be reliably located at a definite depth. According to reference [4], for steel 22K this is about 5 sq mm at a depth of 200 mm.

The resolving power of ultrasonic inspection is governed by both the electrical and acoustical characteristics of a given reflectoscope (ultrasonic frequency, angle of entry, gain factor, etc.) and many factors related to the workpiece under test (surface finish, structure and chemical composition, metal thickness, depth of the defect, etc.). Therefore, optimal operation of an ultrasonic reflectoscope can be obtained by trial and error in each particular case, using standards with natural or artificial defects. Standards should be of the same grade of steel, of the same thickness and welded by the same technique as the welded joints to be inspected.

The inspection procedure with an ultrasonic reflectoscope boils down to the following:

(1) Preparation of the surface of the workpiece;
(2) Adjustment of the reflectoscope;
(3) Actual inspection;
(4) Location, measurement and identification of defects;
(5) Evaluation of the soundness of the welded joints inspected and entry in inspection records.

The reliability of ultrasonic inspection is greatly affected by the human factor, so far no objective records can be obtained with it—as is the case in X- or gamma-ray inspection.

In the manufacture of welded structures for critical applications, visual examination and testing of welds with X- or gamma-rays and ultrasonics should be supplemented by mechanical tests of the weld metal and welded joints as a whole.

For this purpose, standard or special specimens are cut out of a test weld. The test weld may be made concurrently with the basic weld or separately from it, provided the materials and conditions are the same as for the work to be tested.

The usual procedure includes tests of the weld metal and the near-weld area for strength, ductility and impact toughness; examination of micro- and macrographs and fractures of specimens for defects beyond the reach of non-destructive methods. Besides, welded structures may be subjected to tests for ageing, endurance, resistance to corrosion, etc., should their application and service conditions require that.

Chapter V

DISTORTIONS AND THEIR CONTROL IN ELECTRIC SLAG WELDING

As has been found experimentally, actual distortions in electric slag welding are usually three to four times greater than the estimated ones. Unfortunately, no precise methods have been devised as yet to predict distortions likely to occur in heavy sections welded by the electric slag process. Our discussion will, therefore, be limited to empirical data gleaned for crossheads, column halves, columns and power cylinders of hydraulic presses, rolling mill bedframes, high-pressure boiler drums and some other structures.

It is difficult to attach strain gauges to an electric slag joint, as it is covered with moulding shoes or back-up strips on both sides. Instead, in our experiments the longitudinal and transverse contraction in the zone of elastic-plastic strains was measured between the reference punch-marks made some distance away from the edges. The gauge length (i. e., the distance between the punch-marks) varied with the thickness and design of the welded structures and with the width of the welds. Prior to welding, the distance between the punch-marks both along and across the edges was measured and the line-up clearance was determined at various points across the height of the joint. Besides, for some articles overall dimensions were checked both before and after welding.

1. Distortions in Flat-plate Structures Joined by Straight Seams

Flat-plate structures are structures consisting of two or more plates butt-welded and aligned in a common plane, such as bedframes of powerful hydraulic presses, crossheads, columns, bedplates, etc. (see Fig. 131).

The crossheads were welded of steel 22K, from 220 to 250 mm thick. Each joint was 3,200 mm high, or 4,000 mm high, including starting and finishing tabs.

In preliminary experiments, transverse contraction in butt welds varied with the height of the weld, being about 2 or 2.5 mm per metre

(see Chapter IV). Therefore, the plates of the crossheads were lined-up with a tapering clearance between them. The clearance was 30 mm wide at the bottom of the plates, and 40 mm at the top.

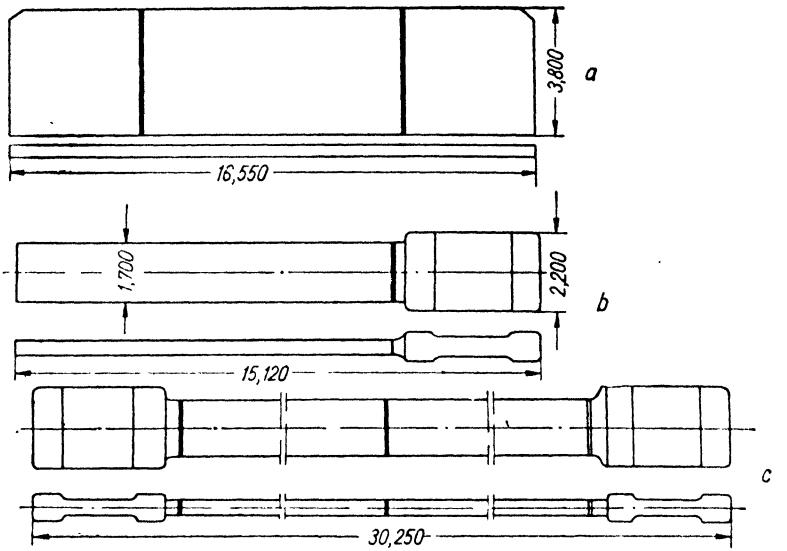

Fig. 131. Parts of a heavy press:
a—crosshead; b—column-half; c—column.

The welds were made with Св-10Г2 electrode wire and ФЦ-7 flux. The welding conditions were:

Electrode speed	200-220 m/hr
Welding current	450-500 a
Welding voltage	48-52 v
Number of electrodes	2
Time of electrodes at moulding shoes	5 sec
Rate of weaving motion	31.7 m/hr
Depth of slag pool	50-55 mm

The reference punch-marks were made on the face and reverse sides of the edges, and the distortions were determined by measuring the distance between them before and after welding. Special emphasis was placed on transverse contraction in the zone of plastic strains as it changed the distance between the centres of the parts welded to the plates in advance.

The results of measurements are presented in Table 24.

Of considerable practical interest is transverse contraction in the zone of plastic strains which was observed in the butt-welded column halves and columns of hydraulic press frames.

Table 24

No of measurement	Joint gap before welding, mm	Distance between punch-marks, mm		Contraction, mm
		before welding	after welding	
	Plate thickness 220 mm			
1-f	45.7	171.5	154.0	17.5
2-f	40.3	179.1	165.1	14.0
3-f	36.8	166.8	156.2	10.6
4-f	32.3	155.9	147.9	8.0
5-f	28.7	163.7	160.3	3 4
1 r	44.4	162.2	145.1	17.7
2-r	40.7	174.0	159.4	14.6
3-r	36 6	147.8	137.0	10.8
4-r	32.6	165.3	157.2	8.1
5-r	29.2	148.3	144.4	3.9
	Plate thickness 250 mm			
1-f	44.8	170.7	153.1	17.6
2-f	39.6	161.5	146.5	5.0
3-f	36.1	158.3	147.2	11.1
4-f	32.8	157.6	150.7	6.9
5-f	29.8	165.4	162.3	3.1
1-r	44.6	158.5	141.5	17.0
2-r	39.9	157.0	143.2	13.8
3-r	37.0	161.1	150.5	10.6
4-r	33.9	152.6	145.5	7.1
5-r	30.5	153.4	150.3	3.1

Notes: 1. The letter "f" stands for the face side of the plate, and the letter "r", for the reverse side;

2. Punch-mark 1 was at the end of the weld, and punch-mark 5, at its beginning.

A column half consisted of a plate 1,750 mm wide and 15,120 mm long and a pillar welded to the plate by the electric slag process. The parts were 200 mm thick at the joint. They were lined up and welded in a jig with a tapering gap 29 to 30 mm wide at the bottom and 34 to 35 mm wide at the top.

The materials and welding conditions were the same as for the crosshead. Transverse contraction was measured by the technique described above. The results of measurements for two column halves are tabulated in Table 25.

Referring to the table, transverse contraction was about 3 mm at the bottom, while at the top it was greater by the difference in the

Table 25

No. of measurement	Joint gap before welding, mm	Distance between punch-marks, mm		Transverse contraction, mm
		before welding	after welding	
		1st column half		
1-f	33.9	147.0	138.8	8.5
2-f	31 4	149.2	143 6	5.6
3-f	29.7	159 5	156.0	3.5
1-r	32.8	151 2	143 9	7.9
2-r	31.3	141.2	136.0	5.8
3-r	28.7	143.3	140.5	2.8
		2nd column half		
1-f	34.8	181.5	173.5	8.0
2-f	32.6	181.5	176.1	5.4
3-f	29.5	179.0	176.7	2.3
1-r	35.4	184.0	176.6	8.6
2-r	33.5	200.0	193.9	6.1
3-r	29.9	184.5	181.8	2.7

Notes: 1. The letter "f" stands for "face side", and the letter "r", for "reverse side" of the joint.

2. Punch-mark 1 was at the end of the weld, and punch-mark 5, at its beginning.

Table 26

No. of punch-marks	Joint No. 2			Joint No 5		
	Distance between punch-marks, mm		Contraction, mm	Distance between punch-marks, mm		Contraction, mm
	before welding	after welding		before welding	after welding	
1	210.3	203.3	7.0	164.0	157.0	7.0
2	213.6	207.2	6.4	167.0	160.0	7.0
3	217.7	211.3	6.4	170.0	163.0	7.0
4	213.8	207.0	6.8	164.5	158.0	6.5
5	216.0	209.5	6.5	172.0	166.0	6.0
6	212.9	206 4	6.5	175.0	169.0	6.0
7	219.9	206.7	6.2	180.0	174.0	6.0
8	220.4	213.3	6.1	180.0	174.0	6.0
9	218.0	211.6	6.4	182.0	175.5	6.5
10	220.0	213.5	6.5	186.0	179.5	6.5
11	217.3	211.2	6.1	182.0	181.5	6.5
12	269.0	212.8	6.2	191.5	185.0	6.5
13	218.5	212.7	5.8	195.0	189.0	6.0
14	219.0	213.8	5.2	189.5	183.5	6.0
15	218.2	212.8	5.4	190.0	184.0	6.0
16	218.0	212.4	5.8	187.0	182.0	5.0
17	222.8	218.5	4.3	187.0	182.0	5.0

joint gap at the bottom and the top of the joint. Thus, the width of the tapering gap seems to have been chosen properly.

Now turn to the transverse strains occurring in a hydraulic press column in welding.

The column examined was 1,750 mm wide and 30,000 mm long and weighed about 100 tons. It consisted of two halves butt-welded to each other. The clearance between the abutting edges was 29 to 31 mm and did not change with the height of the joint.

For the results of measurements of transverse contraction see Table 26.

In this case, transverse contraction of the weld was practically the same throughout its length due to the very high rigidity of the column halves, and the tapering joint gap essential in welding a less rigid structure—the crosshead—could be dispensed with.

2. Distortions in Corner Joints

Distortions in corner joints were examined in welds made in medium-alloy steels. One such joint is shown in Fig. 132. Plates *1* and *2*, 100 mm thick and 1,800 mm wide, were lined up at an angle of 65° with suitable clamps tack-welded on the inside of the joint. The joint gap was 30 mm both at the top and bottom of the joint.

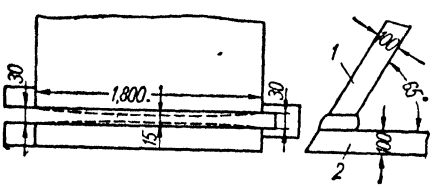

Fig. 132. Distortion in a corner joint welded by the electric slag process.

During welding, the joint gap decreased all the time, when through about a quarter of the weld it was 15 mm, and the tack-welds on the clamps were sheared.

Thus, conventional line-up tools proved inadequate for corner joints welded by the electric slag process. Changes in the welding conditions did not affect the magnitude of distortion.

The appreciable distortion observed in the above-mentioned case should be attributed mainly to the warpage of plate *2* due to ununiform heating.

3. Distortions in Welded Frames

This group of welded structures includes primarily the cast-welded frames of large rolling mills, scale-breaker frames, etc., all butt-welded.

The prevailing distortion observed in this case was of the transverse ununiform type which was caused by uneven contraction at the top and bottom of butt welds.

Table 27

No of joint	Contraction, mm		Difference in contraction at top and bottom of joint, mm
	top of joint	bottom of joint	
1	7.5	5.0	2.5
2	7.0	5.0	2.0
3	9.0	5.0	4.0
4	6.5	3.0	3.5

As a result, the size of the frame was reduced, and the frame was somewhat bent axially at the butt joint. This type of distortion should be taken into account in planning the fit-up and electric slag welding of frames, as it is extremely difficult to reclaim a distorted frame.

Distortions were examined on full-size specimens. The welding of the specimens threw much light on the likely distortions and their magnitude in the above-mentioned structures. As was found, the difference in the gap between the top and the bottom of a joint should be about 4 mm.

Then experiments were carried out on the frame of a scale-breaker and the stand of a rolling mill.

The frame of the scale-breaker measured 450 mm square in cross section. A tapering gap was provided between the abutting edges. It was 30 mm wide at the bottom and 33 to 34 mm at the top.

The welds were made with nine electrodes. Distortion was measured by the technique described above. The results are tabulated in Table 27.

A check after welding showed that the frame was not bent axially at the joints, and that the basic dimensions of the frame had not changed.

Distortions were also studied in the vertical roll stand of a rolling mill. The cross section of stand members at the joint was 800×550 mm. The tapering gap was 30 mm wide at the bottom and 34 to 35 mm at the top of the joint. The weld was made with a plate electrode. The difference in the contraction at the top and bottom of the joint was fully compensated by the taper of the joint gap.

As has been found in welding actual welded structures of the above type, the magnitude of distortions is governed by welding conditions, the rigidity of the parts being welded and the location of welded joints relative to the geometrical axis of the cross section.

Welding conditions affect distortions most of all. As the energy per running metre increases, the workpiece is heated more, and its contraction is increased, too.

If the parts being welded are made long enough or special fixtures are employed, rotation of the cross sections at the joint is reduced.

This incidentally has been borne out in welding columns of great length. In fact, the rigidity of the workpiece made the tapering gap redundant.

The location of welded joints in the structure also has an appreciable effect on the magnitude of distortions. It will be least when the static moments of contraction stresses brought about in welded joints relative to the geometric axis of the member cancel out each other.

4. Distortions in Slag-welded High-pressure High-temperature Boilers

When making straight welds by the electric slag process, the gap changes in spite of the clamps provided. A decrease in the width of the gap may result in the electrode guide short-circuiting to the workpiece, while an increase in its width entails an excessive consumption of welding materials, electric energy and welding time.

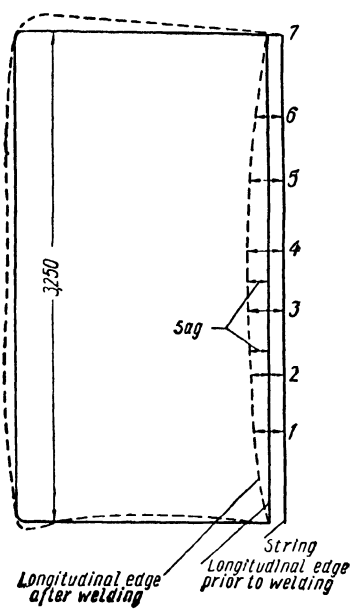

Fig. 133. A shell course of a high-pressure boiler before (straight line) and after (dotted line) electric slag welding of one longitudinal seam.

Fig. 133 and Table 28 illustrate changes in the sag of the longitudinal edge after the welding and cooling of a boiler shell. The dimensions of the shell were: length, 3,250 mm; wall thickness, 90 mm; and inside diameter, 1,300 mm. The distortion was measured by means of a wire strung along the boiler shell.

The sag was at its largest in the middle of the weld, being 4 to 5 mm. Changes in the joint gap for a similar boiler shell are given in Table 29.

The gap as provided in the line-up was from 28 to 31 mm. Referring to Table 29, the gap first closed by 3 to 4 mm in the middle of the joint, but then widened by 3.5 mm at the end of the joint.

Upon cooling, the weld contracted, and the boiler shell was distorted. Table 30 illustrates these changes as measured at eight points on the shell described above.

Thus, the absolute contraction in the middle of the weld was as large as 9 mm.

The magnitude of contraction is somewhat changed if two joints are welded at a time. In spite of the clamps placed across the joint, the gap is reduced towards the middle of the weld and is sharply

Table 28

No of punch-mark	1	2	3	4	5	6
Distance from lower edge, mm	600	1,000	1,400	1,800	2,200	2,600
Sag, mm	3.1	4	4.1	3.6	2.8	1.2

Table 29

No of punch-mark	1	2	3	4	5	6	7
Distance from lower edge, mm	500	950	1,400	1,850	2,300	2,750	3,250
Changes in gap, mm . .	—0.7	—0.6	—4.0	—3.0	—3.5	+1.5	+3.5

Note: The "—" sign stands for a decrease in the gap, and the "+" sign for an increase in its width.

widened towards the end of the weld. The joint can be prevented from opening up by a solid clamp of large cross section, tack-welded on both sides of the two shell halves before the longitudinal welds are made. This fixture prevents the gap from being either increased or decreased in welding. The clamp is removed immediately upon welding so that the weld may shrink laterally in cooling.

Table 30

No of punch-mark	1	2	3	4	5	6	7	8
Distance from lower edge, mm	400	800	1,200	1,800	2,000	2,400	2,800	3,200
Contraction, mm . .	2	6	8	9	8	8	5.7	4.8

Two longitudinal seams electric slag welded in a boiler shell simultaneously help maintain the joint gap more or less constant in width. This will be seen from Table 31 compiled for a boiler shell 6 m long and with a wall 110 mm thick.

Table 31

Distance from lower edge, mm	1,000	1,500	2,000	2,500	3,000	3,500	4,000	4,500	5,000	5,500
Changes in gap, mm	—2.5	—3.9	—4.5	—5.2	—5.4	—5.4	—5.0	—4.5	—3.2	—0.5
Contraction, mm	5	8	10	12	13	13	13	13	11	8

As Table 31 shows, changes in the width of the gap are considerably less when two welds are made simultaneously than when welding one joint at a time.

5. Distortions in Circumferential Seams

Distortions in circumferential seams are of more complex nature than in straight seams, as the edges move in space rather than in a plane.

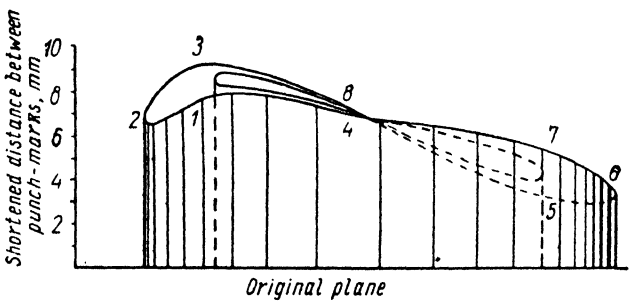

Fig. 134. Curves of distortion in electric slag welding of a girth seam on a cylinder 2,200 mm OD and 350 mm wall thickness.

Experimental data have been obtained for cylinders with an outside diameter of 2,200 and 850 mm, a wall thickness of 350 and 150 mm, respectively, and of different lengths.

The data are tabulated in Table 32.

Fig. 134 illustrates the nature of the distortions observed in specimen No. 2.

The distances from the plane of origin to the points on the curve bear a ratio of 1 to 5 to changes in the distances between the punch-marks on the workpieces.

Table 32

Specimen No.	Size of cylinders, mm		Distance between punch-marks, mm	No. of point of measurement	Decrease in distance between punch-marks, mm	Notes
	dia	thickness				
1	850	150	150	*1* *2* *3* *4* *5* *6*	6.0 5.2 6.9 6.1 4.4 3.6	Excavator cylinder (Fig. 135*a*)
2	2,200	350	130	*1* *2* *3* *4* *5* *6* *7* *8*	0.7 5.4 8.1 8.8 7.4 5.9 — 8.0	Two boiler shells, 1,000 mm wide each (Fig. 135*b*)
3	2,200	350	130	*1* *2* *3* *4* *5* *6* *7* *8*	7.9 6.7 9.3 6.7 3.2 3.2 4.3 6.9	Cylinder 4 m long, with bottom (Fig. 135*b*)

The lateral dimensions of the workpiece on the chart are shown on a 1 : 40 scale. Fig. 135 shows the position of points relative to the beginning of the weld with the circle divided into six and eight parts. Referring to Fig. 134, the distortion of a cylinder in welding a circular weld may be divided into three components:

(1) Contraction along the axis;

(2) An axial bend of the entire workpiece at the joint;

(3) Rotation of the half cross sections relative to each other (the area bounded by points *4*, *1*, *2*, *3* and *8*).

The measurement of distortions on other cylinders of the same size have shown that the spread of values for the respective points does not exceed 1 to 1.5 mm, the spread being occasioned mainly by

the difference in the rigidity of clamping fixtures in the initial welding position.

In cylinders with bottoms, the relative displacement of reference points may vary by 2 or 2.5 mm, but the general trend of distortions remains the same. Among other things, the sharp bend along the line connecting points *1* and *3* could be observed in all cases.

In specimens *2* and *3*, the axial contraction was $7^{\pm 2}$mm (Table 32); the axial bend 0.15° (or 2.7 mm per metre). The axis of the workpieces rotated about the line connecting the points *4* and *8*.

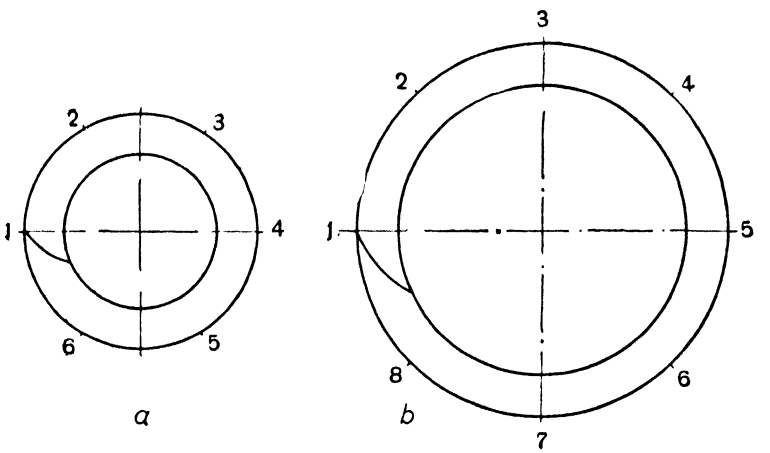

Fig. 135. Points of measurement of distortion on girth seams.

For cylinders of a smaller diameter, the experimental data available are insufficient for any relations to be established.

The few investigations carried out to date into the distortions of structures welded by the electric slag process make it possible to draw the following conclusions:

(1) In butt-welded structures of small length, ununiform lateral contraction results in a bend at the butt joint. The contraction can be prevented by providing a tapering gap between the abutting edges. Variations in the width of the gap should be found empirically. The tapering gap may be dispensed with when welding similar structures of increased rigidity (such as columns of hydraulic presses).

(2) No distortion in the plane of plates is observed in butt welds.

(3) Distortions in cylinder shells with two longitudinal seams can be reduced by welding the two seams simultaneously.

(4) When welding girth seams on boiler shells, the axial bend can be prevented by a tapering gap whose width is found by trial and error.

Chapter VI

EQUIPMENT FOR ELECTRIC SLAG WELDING

1. Features of Design

Electric slag welding equipment differs in a number of aspects from conventional automatic arc welding machines for the downhand position.

For one thing, it incorporates weld-moulding devices. In most cases, these are either travelling copper shoes or stationary copper back-up strips, with inside passages for cooling water.*

Secondly, machines for electric slag welding have a drive moving them along the weld which usually is of the vertical type. In conventional sets for arc welding in the downhand position, the weight of the welding head and its rolling gear provide for friction between the wheels and the track or the workpiece itself, which is necessary for the welding set to progress along the weld. This arrangement is not possible in welding sets for vertical joints, as the weight of the apparatus is an obstacle to the travel of the welding head along the joint. For this reason, welding sets for vertical joints are fitted with suitable rolling gear.

Thirdly, provisions are made for the level of the metal pool to be automatically maintained constant in relation to the weld-moulding shoes.

Each of these features tells to a greater or lesser extent on the construction of welding equipment. The manner in which a welding set travels along the joint and the drive provided for the purpose affect it more than anything else. On the basis of this feature the following types of welding sets are singled out at present:

I. Track-riding sets travelling on vertical rails or tracks laid along the joint.

II. Trackless welding sets traversing the workpiece itself and mechanically engaged with it.

These two types of welding sets may be single- or multielectrode, light or heavy. They serve to weld thicknesses from 40 to 400 mm or even more.

* Apparatus using plate electrodes may have no weld-moulding devices.

III. Walking magnet sets of the portable type, traversing the workpiece itself and held to it by walking electromagnets. They are intended to weld plates up to 100 mm thick with one or two electrodes.

An electric slag welding set should perform the following operations:

(a) to mould the weld;

(b) to feed one or several electrode wires into the weld pool;

(c) to move the welding head along the joint;

(d) to impart weaving motion in a horizontal plane to the electrodes in the weld pool when welding heavy sections.

Normally, an electric slag welding set has three mechanisms: (1) an electrode feed mechanism feeding one or several wires; (2) a vertical travel mechanism; and (3) a mechanism to move electrodes to and fro in a horizontal plane (if necessary). The mechanisms can be actuated by a common drive or by several drives, depending on the purpose and construction of the welding apparatus.

Separate drives are preferable, as the speed of the respective mechanisms can then be controlled individually. The only advantage of a common drive is the portability and small weight of the welding set, which is of major consideration for portable-type equipment. A more recent trend, however, has been to equip even portable welding sets with separate drives in view of the convenience and reliability of their control.

The operations and respective mechanisms listed above are not necessarily present in all welding sets. The set-up and arrangement of mechanisms may vary within broad limits with the purpose of a given welding set and with the welding technique adopted. By way of example, sets specifically designed for welding with plate electrodes do not have mechanisms to feed electrode wire and to move the electrodes to and fro in a horizontal plane, nor do they have moulding shoes. Welding sets for thicknesses up to 50 or 60 mm and some of the multielectrode sets (such as the A-480) do not need a mechanism to impart weaving motion to the electrodes. Welding sets working with consumable electrode guides (such as the A-545) have only an electrode feed mechanism, as the other mechanisms are redundant.

Cases are often when the electrode feed mechanism is made external to the welding set so as to enhance its portability. In this case, the electrode wire is fed by the external mechanism through flexible metal hoses, as in the case of semi-automatic arc welding machines. This principle is employed in walking magnet welding sets.

Here are the requirements common to all mechanisms of an electric slag welding set:

(1) Their working speed must be adjustable so that the apparatus may be set to the desired speed. Speed control may be either continuous or in steps. In the first case, it is accomplished by varying the r.p.m. of the drive motor; in the second case, by means of change gears or a gearbox.

(2) The working speed of the vertical motion should be automatically controlled by variations in the level of the weld pool. Two techniques are employed in practice: (a) control of the drive speed (the A-372) and (b) use of a "start-stop" or "on-off" control circuit (the A-314) in the traction motor.

(3) The traction mechanism can be switched over from the working to the idling or stepped-up speed in setting operations. In portable-type sets, disconnection of the traction mechanism from its electric motor will suffice, as the welding set can then be moved by hand.

(4) The pull of the traction mechanism should be such as to take into account the weight of the apparatus and the friction of the moulding shoes. Incidentally, the friction of the moulding shoes may be as great as 100 kg per shoe.

(5) Although in most cases the electrode speed should be constant during welding, it is desirable to have facilities for changing it in order that the welding process be initiated more quickly and easily in the beginning or when the slag pool has to be restored. This can be accomplished either by means of a d. c. variable-speed motor or by a gearbox.

(6) The weaving-motion mechanism should be reversible, the simplest way of accomplishing it being a system of limit switches. The swing of weaving motion can also be adjusted by appropriately positioning the limit switches. The rate of weaving motion should be adjustable from 20 to 60 m/hr. In modern welding sets this is effected by change gears. Both at the beginning and at the end of a weaving stroke the welding head should be stopped for the desired length of time, adjustable from 2 to 6 sec

2. Track-riding Electric Slag Welding Sets

The A-314 (Fig. 136) is an example of a very simple light-weight portable set for welding sections up to 55 mm thick with one electrode. As a matter of record, it was employed to weld automatically—and for the first time in welding practice—the vertical seams on the shell of a blast-furnace at the Zaporozhstal Iron and Steel Works and the erection joints of the world's largest all-welded Paton Bridge in Kiev.

It consists essentially of two components: a welding head *1* and a rack-and-rail *2*. The rail is held down to the workpiece parallel to the joint either by means of clamps *3* or electromagnets. The length of the rail varies with the length of the weld to be made, but usually does not exceed 3 or 4 metres.

For straight welds on a flat plane, the rails are rigid and straight, and made of light channel sections. The weight of a rail and rack does not exceed 7 kg per running metre.

For curvilinear welds of variable curvature, such as erection seams on a ship's hull, the rails should be flexible, and made of thin steel

strips. The rails are fitted with several electromagnets each. The electromagnets hold the rails tight to the surface of the workpiece so that they closely follow its outline. As an alternative, the rails may be tack-welded to the workpiece.

The welding head *1* is a light-weight carriage with a single drive for both travel along the joint and the feeding of the electrode wire. The drive uses a 0.1 kw induction motor *4*. One end of the motor

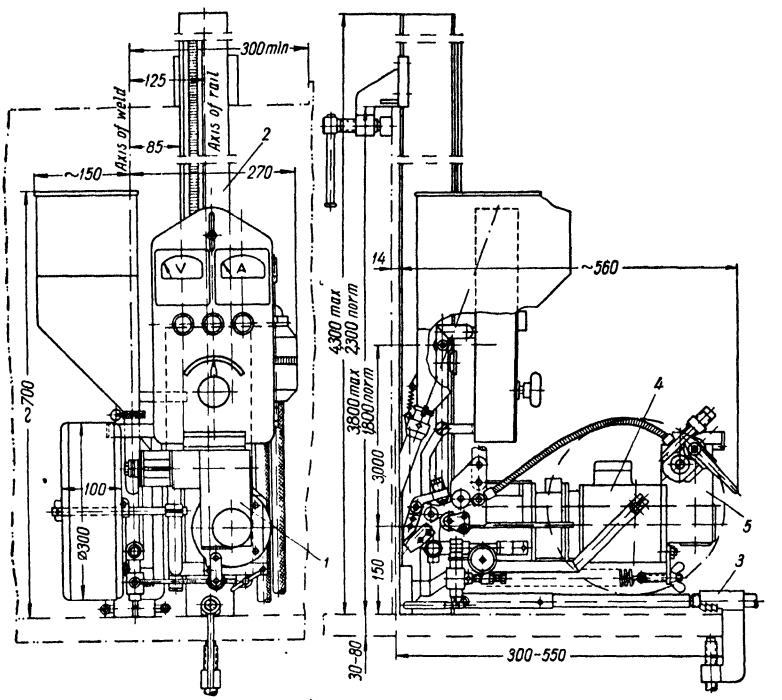

Fig. 136. Type A-314 single-motor rack-riding welding apparatus.

shaft is permanently connected to the electrode feed mechanism *5*, while the other end is coupled by an electromagnetic clutch to the traction mechanism. The driving gear of the traction mechanism meshes with the rack on the rail.

The controlled electromagnetic clutch makes it possible to disconnect the traction mechanism when required so as to control the level of the weld pool by the "on-off" principle.

The A-433 (Fig. 137) is also a track-riding welding set serving the same purposes as the A-314, but differing from the latter in design and electric circuit. The A-433 has two separate drives for (a) vertical travel, incorporating an 80 w, 3.000 r.p.m. d.c. electric motor *1*

and (b) wire feed employing an a. c. 180 w, 2,800 r.p.m. induction motor *2*. The two drives each have change gears for speed regulation.

The actual welding speed at a given speed of the welding set which may be anywhere from 2.6 to 20 m/hr varies with welding conditions and is determined by the speed of the motor (from 1,000 to 3,000 r.p.m.) which is regulated automatically by variations in the level of the weld pool. The electrode speed can be varied from 68 to 430 m/hr.

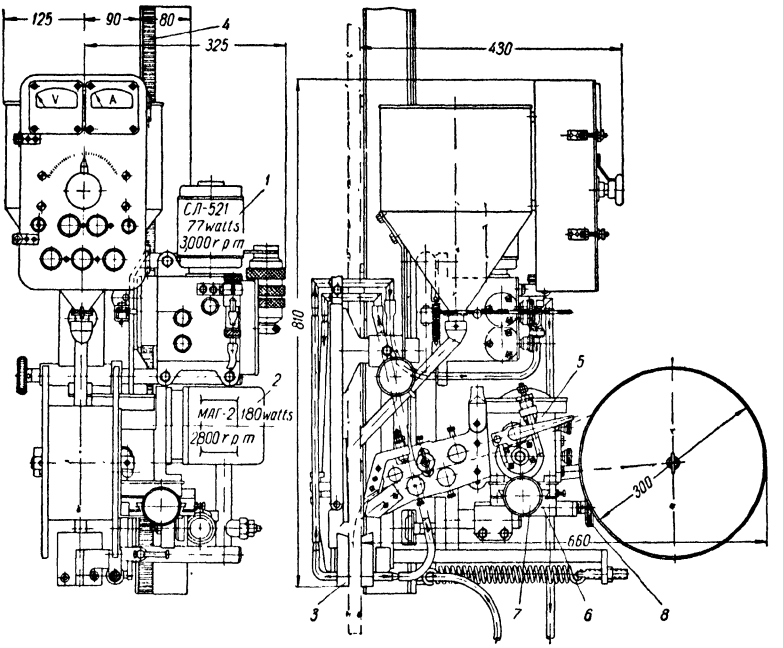

Fig. 137. Type A-433 double-motor rack-riding welding apparatus.

What distinguishes the A-433 from the A-314 is a second moulding shoe *3* which shapes the bead on the reverse side. This, however, does not exclude the possibility of employing a stationary back-up strip.

The apparatus travels on a vertical monorail fitted with a rack *4*. The rail may be rigid for straight seams or flexible for curvilinear seams. The radius of curvature of a weld and of the rail should not be less than 3 metres.

The rail is laid parallel to the joint and is tack-welded or clamped to the workpiece.

The set uses one electrode wire 3 mm in diameter and a welding current of up to 900 a. The welding head *5*, which is, in fact, an electrode feed mechanism fitted with an electrode holder is mounted on

twin carriage *6* on which the head can be moved manually in two mutually perpendicular directions in a horizontal plane. In this way, it is possible to control the position of the electrode relative to the weld (a) across the joint by means of a handwheel *7* and (b) across the thickness of the plates being welded by means of another handwheel *8*. For adjustment purposes provision is also made for the head to be moved vertically relative to the carriage and the moulding shoes.

The traction drive incorporates a device which decouples the reduction gear from the carriage so that the welding set may be pushed on the rail by hand. The other facilities provided include a device with which the set can be removed and put on the rail at any point of the track. This arrangement saves much time if two rails are provided: while the operator completes a weld on one rail, the other rail can be laid on another joint, and the welding head can then be easily moved onto it.

The A-372P (Fig. 138) is a three-electrode, track-riding welding set widely employed on thicknesses from 60 to 450 mm. In fact, it may use either one, two, or three wire electrodes at a time. The welding current per electrode is up 1,000 a, the aggregate current being as heavy as 3,000 a.*

The A-372P is the most versatile of all existing sets for electric slag welding. The basic model is intended for welding straight seams on thicknesses up to 250 mm. A few changes and readjustments make it suitable for:

(a) Welding straight seams of any length on thicknesses up to 450 mm. To this end, the set should have an extended carriage so that the head may move in a weaving pattern, and extended electrode holders;

(b) Welding circumferential seams on thicknesses up to 450 mm. In this case, apart from the modifications mentioned above, the set should be fitted with a hinged suspension for the moulding shoe so that it can swing over a considerable distance in a horizontal plane;

(c) Welding with plate electrodes of large cross section instead of 3 mm electrode wire. In this case, the welding head should be replaced with a special holder (Fig. 139) for plate electrodes. With three plate electrodes, the set can weld joints up to 1,000 mm long (or high) in steels up to 600 mm thick.

The standard equipment of the A-372P set, apart from the welding apparatus proper which feeds electrodes into the weld pool and performs all the movements required for welding, includes a rail track, a ТШС-1000-3 three-phase welding transformer and switch gear box.

---

* In welding plain carbon structural steels such heavy current is not employed as crystallisation cracks may develop

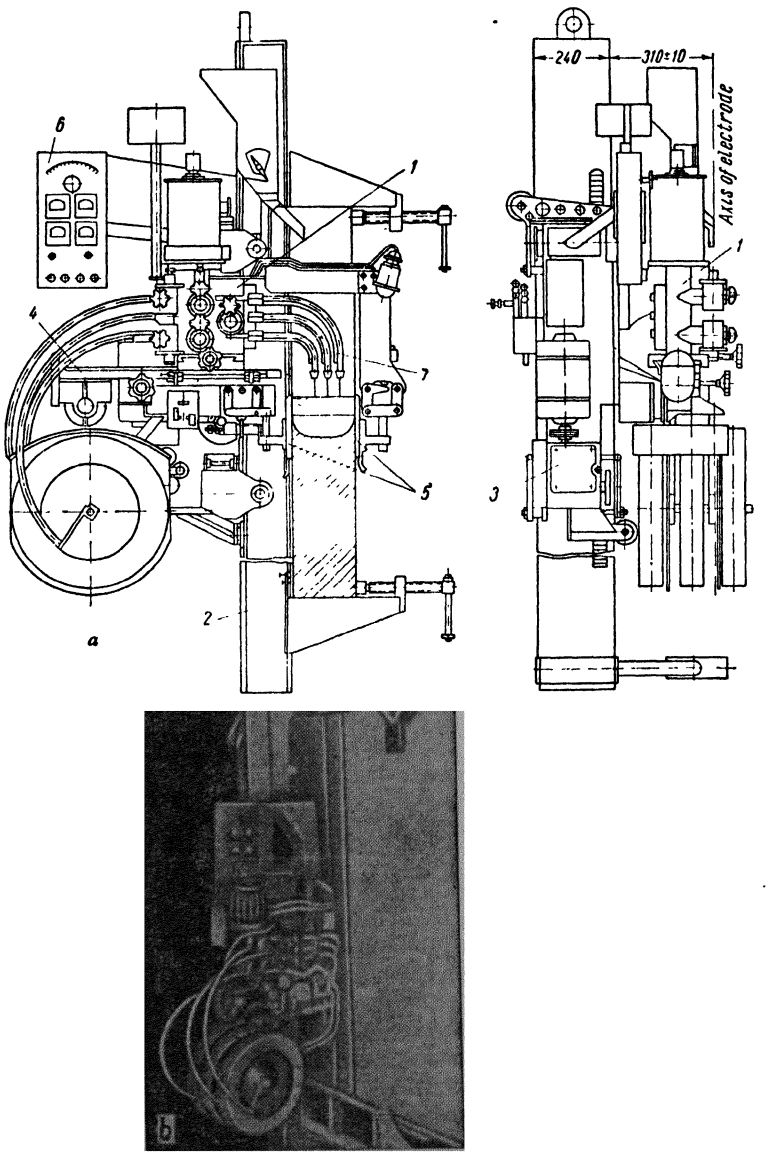

Fig. 138. Type A-372P three-electrode rack-riding welding apparatus using wire electrodes:

a—diagram; *b*—photograph

The set and the rail track together are usually mounted directly on the workpiece. As an alternative, the track can first be laid and then the head be put on the track, at any point of the joint.

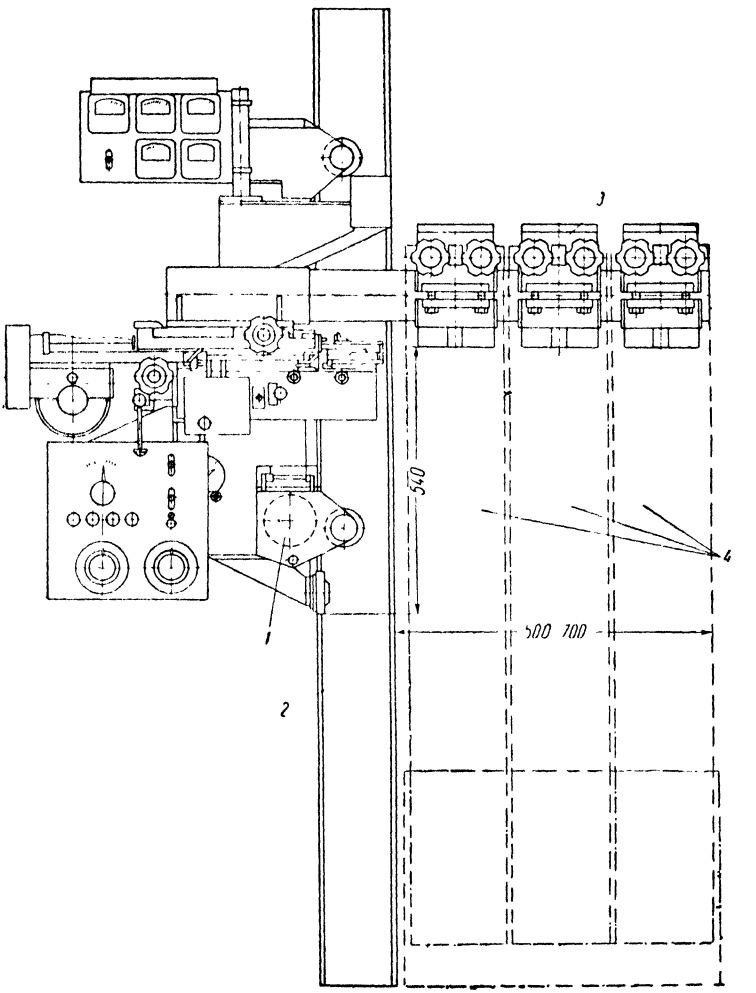

Fig. 139. Type A-372P welding apparatus using plate electrodes:
1—trolley; *2*—track column; *3*—electrode holder and welding cable connectors; *4*—plate electrodes; *5*—workpieces

In case of need, the rail track *2* can be built into the load-bearing members of the welding set. It can, for example, be attached to the lift of the operator's cab or mounted as a vertical column on a truck.

The actual arrangement of the rail track is determined by the construction and purpose of the welding set as a whole. A truck-mounted track is a component of welding sets for circumferential seams.

The A-372P welding apparatus proper consists essentially of five units (Fig. 138): (a) a motor-driven truck *3* for vertical travel of the head on the rail track; (b) a three-electrode head *1* to feed electrode wire into the weld pool through electrode guides *7*; (c) a weaving-motion mechanism *4*; (d) moulding shoes *5* and (e) a control panel *6*.

The apparatus uses three electric motors which take care of the working movements and main mechanisms of the set. These are: (a) a ПН-2.5 d. c. motor rated at 0.7 kw for the trucks; (b) a similar ПН-2.5 0.7 kw d. c. motor for the welding head *1*; and (c) a МАГ induction motor rated at 0.1 kw for the weaving-motion mechanism.

The d. c. electric motors in the truck and the welding head make it possible to vary the welding and electrode speeds over the entire range of motor speed (1,100 to 2,900 r. p. m.). The range of working speeds of the truck and head motors can be extended by means of change gears with which the optimum motor speed can be obtained at a given welding or electrode speed.

The speed of the truck is controlled continuously and automatically by variations in the level of the weld pool, which appropriately change the speed of the drive motor.

The change gears of the truck motor enable the welding apparatus to be set to the desired mechanical speed, $v_{m.s}$, at 2,870 r. p. m. The mechanical speed should be 1.5 to 2 times as high as the average predetermined welding speed, i. e., $v_{m.s}=(1.5 \text{ to } 2)\, v_w$.

In all, the working speed of the truck and, consequently, the welding speed can be varied between 0.5 and 9.5 m/hr.

The truck motor has a clutch with which the truck can be thrown into idling speed (50 m/hr). Fig. 140 shows the kinematic diagram of the tractor. The traction mechanism is built into an aluminium housing held on the rail by guide rollers and a pinion which meshes with the rack of the column. All the components of the welding apparatus are affixed to the truck frame.

The speed of each electrode and, consequently, the current value are adjusted by means of the change gears of the welding head. Besides, the electrode speed can be controlled on the run and simultaneously for all the electrodes by operating the speed selector switch on the control panel which varies the motor speed in steps. The switch in the A-372P set has nine positions: 1,300; 1,525; 1,750; 2,200; 2,425; 2,650; 2,870; and 3,100 r.p.m.

With the motor running at the rated speed (2,870 r. p. m.), the electrode speed can by varied between 150 and 500 m/hr by means of the change gears.

Fig. 141 shows the kinematic diagram of the welding head and the weaving-motion mechanism. The three pairs of feed rollers and the other components of the head coming in contact with the electrode wire are electrically insulated from one another and from the head housing, as they are connected to the different phases.

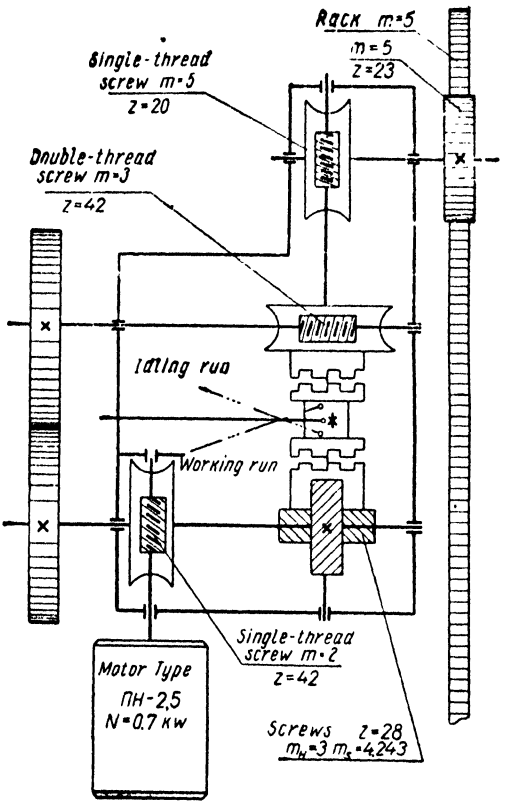

Fig. 140. Kinematic diagram of the trolley in Type A-372P welding apparatus.

The welding current is carried to the electrodes by current-conducting electrode guides (Fig. 142*a*). The guides also straighten and position the wire in the groove. The wire enters the groove by a steel tube, leaving it bent in the arc of a circle. The contact fork at the end of the electrode guide bends the wire in the opposite direction so as to straighten it and provide the necessary contact pressure. The contact fork has a screw with which it can be moved in the plane of curvature of the wire. This arrangement controls the way in which the wire is straightened and serves to restore the contact pressure in case the contact fork wears out.

Apart from controlling the longitudinal position of the electrodes, the electrode guides can vary, although within narrow limits, their lateral position in the groove. This purpose is served by screws actuating the appropriate levers of the electrode guides.

The least distance between two adjacent guides (and, consequently, between two adjacent electrodes) in the A-372P is 40 to 50 mm.

The weaving-motion mechanism, schematically shown in Fig. 141, is driven by a separate electric motor and moves the welding head across the carriage. The carriage is actuated by a screw rotating in

a moving nut. The reversal of the motor changes the direction of travel of the head. At the extreme positions of weaving motion—at the moulding shoes—the head dwells for a pre-arranged length of

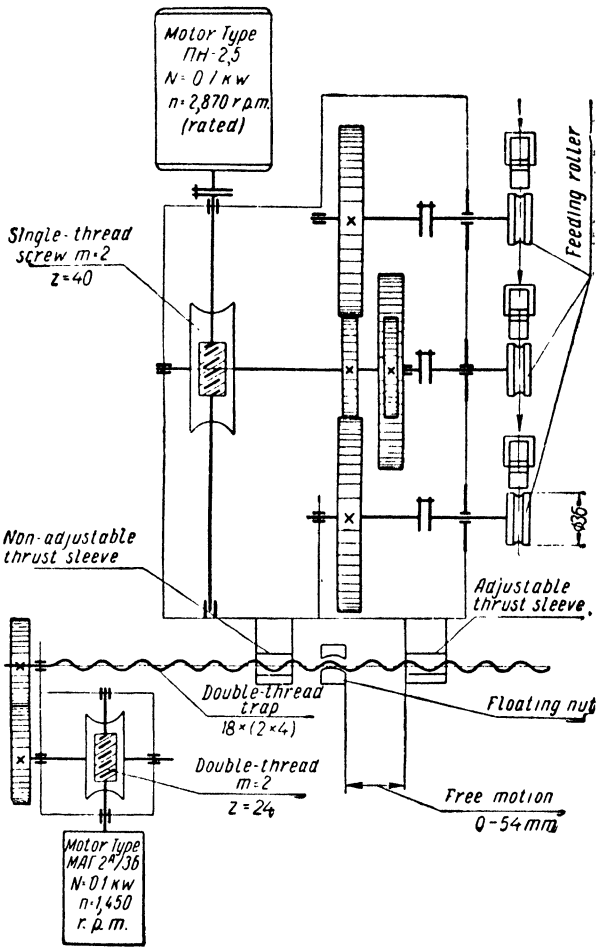

Fig. 141. Kinematic diagram of the welding head and weaving motion mechanism in Type A-372P welding apparatus.

time. The time (which may be as long as 6 sec) depends on the play between the moving nut and the thrust sleeves one of which may be shifted for the purpose. In fact, the time of dwell is the time necessary for the play to be taken up. The speed of weaving motion is

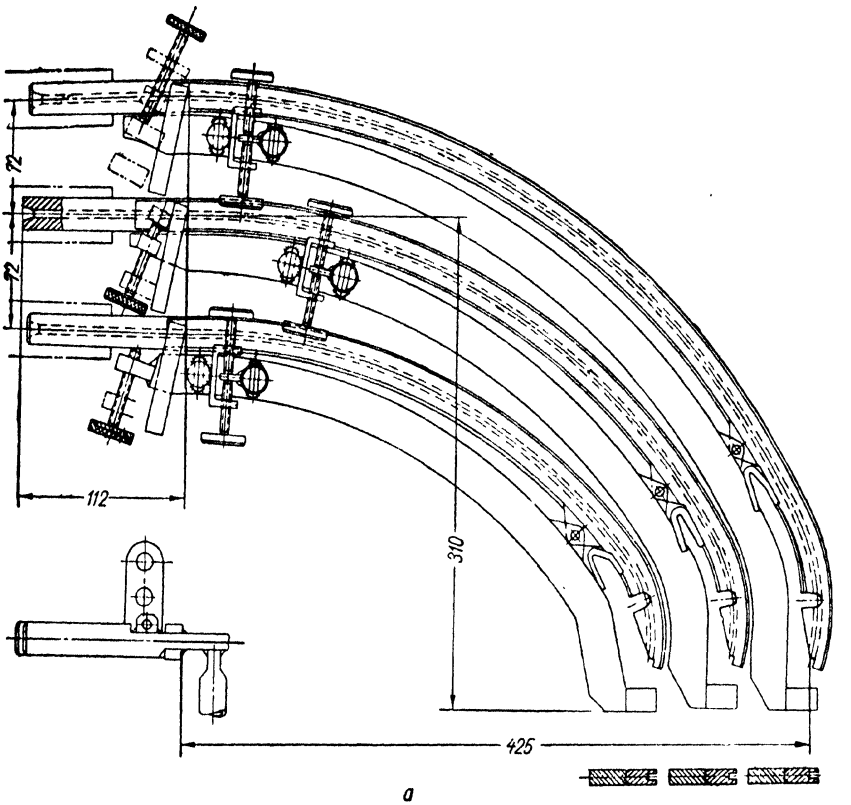

a

Fig. 142. Electrode guides and moulding shoes

adjustable between 20 and 60 m/hr by means of the change gears. The swing of weaving motion is controlled by a system of limit switches and adjustable limit stops on the carriage.

The face moulding shoe *5* is suspended from the bracket of the truck (Fig. 138). The reverse-side moulding shoe is suspended from a plate *8* made fast to the truck and passed between the abutting edges of the workpiece. The face moulding shoe differs in construction from the reverse-side one in that it has a built-in electric pick-up of an automatic weld-pool level controller. The reverse-side moulding shoe (Fig. 142*d*) and the supporting plate together can be removed, as in many cases a stationary back-up strip (Figs. 142*b* and *c*) is more preferable (see Chapter IV).

The shoes are made of copper and cooled with running water circulating in the internal passages. Appropriate springs and hinged

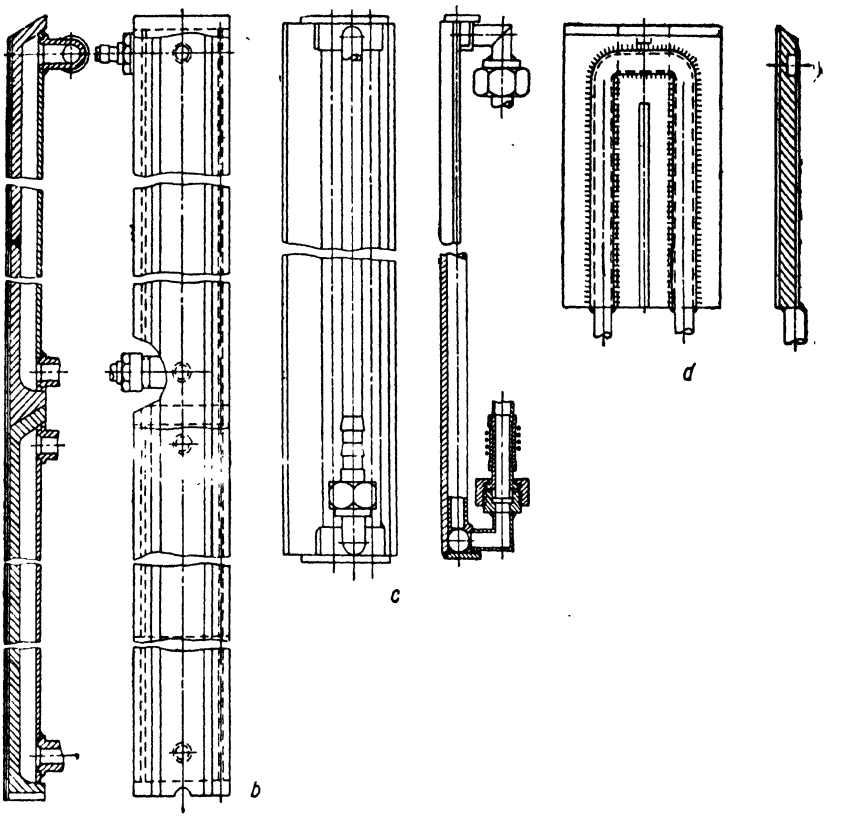

in three-electrode electric slag welding units.

suspensions hold the shoes tight to the edges of the workpiece. Both the shoes and suspensions may vary widely in construction with the type and size of the weld, requirements of the fit-up, the automatic control employed and many other factors.

For a moulding shoe to work faultlessly, it should be held tight to the edges of the workpiece. This in turn depends on the accuracy of the fit-up, notably on whether or not the edges are offset, and on the construction of a given moulding shoe.

From the view-point of construction, there are two types of moulding shoes, namely (a) *stiff moulding shoes* whose shape cannot be changed in welding when the edges are offset (these shoes will not fit closely to the edges if the offset is more than 1.5 or 2 mm); and (b) *flexible moulding shoes* whose shape can be changed to make up for the offset of the edges.

Stiff moulding shoes are recommended for Tee and butt joints, in which the edges are not more than 2 mm out of plane, and for circumferential seams. A regular stiff moulding shoe for straight butt welds is simple in construction and does not call for any detailed explanation. A moulding shoe for circumferential seams should be bent to the same radius as the workpiece.

Moulding shoes for corner- and Tee-welded joints differ from those described above only in the cross section which follows closely the outside surface of the weld and the adjoining edges of the workpiece.

When the edges of a workpiece are more than 2 mm out of plane, use should be made of flexible moulding shoes. Being more intricate in construction, their use should really be justified.

Currently, two designs of flexible moulding shoes are used: (1) notched shoes; and (2) hinged shoes.

A notched shoe is a solid copper bar similar to a regular stiff shoe with the difference, that it has two deep longitudinal notches. Along these notches the block is very thin (2 mm). Therefore, it can easily be bent along the notches so that its sides could fit closely to the edges of the workpiece, even if they be appreciably out of plane. The shoe can be bent in welding by knocking slightly with a hammer at the rear of the shoe suspension.

Notched moulding shoes are applicable to both straight and circumferential welds. In the latter case, they should be bent longitudinally to the same radius as the workpiece.

Hinged moulding shoes are based on a more sophisticated principle of operation. A regular double-hinge moulding shoe for straight butt welds consists of three plates—a middle one and two outer ones—connected by hinges and spring-loaded rods. The hinges enable the shoe to align itself along the edges of the workpiece and fit closely to them under the action of an external force. These shoes are only applicable to straight welds. They cannot be employed on circular welds because of the curvature of the workpiece.

A more recent trend has been towards flexible shoes consisting of two plates which fit to each other with their side faces all along the length. The plates are connected by spring-loaded bolts which provide for reliable contact between the side faces, but permit them to move relative to each other in the plane of contact. The two plates, which are held down by the pressure of the suspension, can shift relative to each other as much as the edges are out of plane. In this way, the plates are held tight to the edges of the workpiece. These composite shoes are applicable to both straight and circular joints in which the edges are up to 5 mm out of plane.

Of whatever construction, moulding shoes and their suspensions are so built that pressure is applied at two points, thus facilitating the self-alignment of the shoe along the weld. For this purpose, the suspensions have horizontal balancing arms.

The A-480 (Fig. 143), which is a multielectrode set, may also be classed under the heading of track-riding welding equipment,

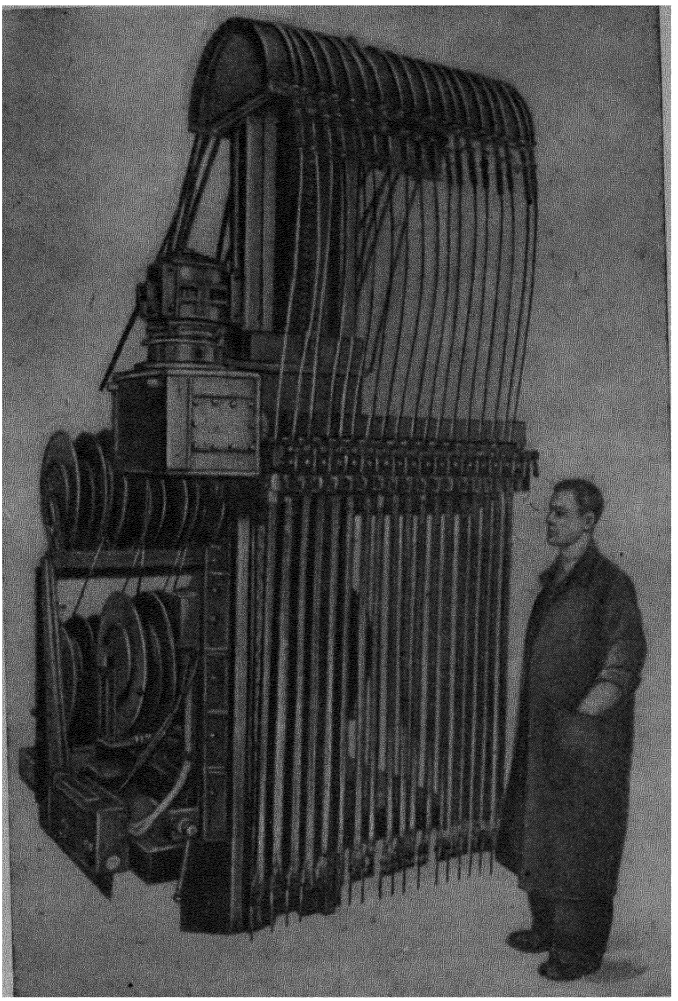

Fig. 143 Type A-480 multielectrode welding apparatus using wire electrodes.

as the welding head travels vertically on a machine-tool type column.

The A-480 differs markedly from the previous sets both in construction and in ratings. Its field of application is to butt weld members with a compact cross section of up to 1,000 mm square at the joint,

such as cast-welded rolling mill frames, shaft components, etc., rather than to make regular welds of considerable length. The weld is

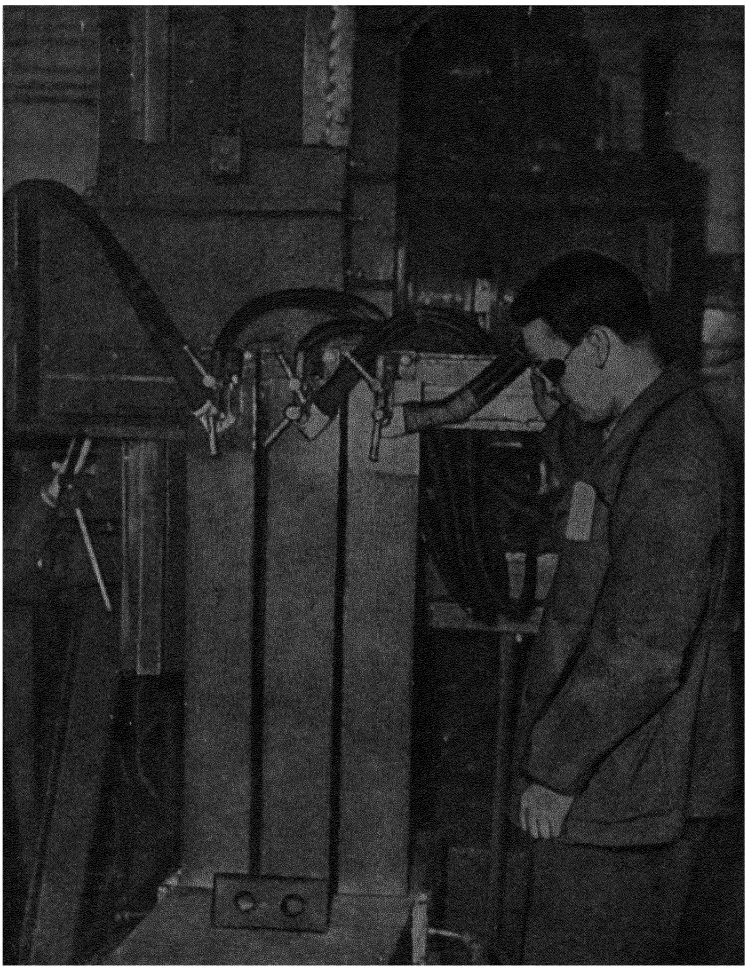

Fig. 144. Type A-480 welding apparatus using plate electrodes.

backed up either by stationary copper back-up strips with internal water cooling or by fusible steel strips.

The set can use either an assembly of as many as 18 wire electrodes 3 mm in diameter or a combination of as many as 9 plate electrodes (Fig. 144). In either case, the electrodes are grouped into three equal banks, each for one phase of a ТШС welding transformer.

The A-480 welding set is superior to all existing equipment for automatic welding, both in power and production rate.

When 18 wire electrodes are used, and draw their power from a three-phase line, the welding current usually is 2,000 a per phase, totalling 6,000 a; with plate electrodes it is 3,000 a per phase, totalling 9,000 a.

The A-480 set includes (1) the welding apparatus proper, which feeds the electrode and performs the necessary movements; (2) an electrical control box; and (3) a ТШС-3000-3 three-phase welding transformer.

The welding apparatus proper incorporates (1) a multielectrode head mounted on a vertical carriage. When plate electrodes are employed, the head is replaced by a suitable holder with which the electrodes are affixed to the carriage; (2) a vertical travel mechanism; (3) a bedframe and guide column for the carriage; and (4) a bank of reels on the bedframe for electrode wire.

The welding head is a multiroller wire feed mechanism driven by a 1 kw electric motor. Eighteen electrodes can be fed at a time, though provision is made for fewer electrodes. The electrode spacing may be varied from 50 to 90 mm, so as to obtain proper penetration without having to move the electrodes in a weaving pattern.

The electrode speed can be adjusted between 42 and 260 m/hr by means of the change gears in the reduction gear box. The electrode guides are attached to the welding head housing. The guides are as long as the maximum height of the joints welded, or 1,000 mm.

An electrode guide is a straight steel plate in which a passage is made for the electrode wire. The guide tip is so bent that the wire comes out curved. The copper contact brush, which is brazed to the guide tip, bends the wire in the opposite direction to straighten it and to provide the necessary contact pressure. The spring action of the bent wire makes up for the wear and tear of the contact over a sufficiently wide range. When worn down heavily, the contacts can be reconditioned by building up their surface.

In this welding set, the maximum attainable length (or, more accurately, height) of the weld depends solely on the length of the electrode guide and is equal to it. The reason is that the A-480, as distinct from other welding equipments, has straight rather than curved electrode guides; in welding, the straight electrode guides are introduced into the groove from above rather than from aside, as is the case in other welding sets.

In the A-480 curved electrode guides with which welds of practically any length can be welded, cannot be employed because of the large number of guides used.

As has been noted, the set may be readjusted for welding with plate electrodes by replacing the welding head and its drive by a plate electrode holder (see Fig. 144).

The vertical travel mechanism is mounted on the top of the column and is coupled with the carriage by an endless traction chain. The

mechanism uses a 0.6 kw electric motor which can run at both working and idling speed.

The change from working to idling speed is effected by a claw clutch, while the working speed can be varied by means of change gears in the range from 0.12 to 2.00 m/hr.

Both the A-480 and the A-372 are peculiar in that when they employ plate or rod electrodes instead of welding wire, the welding head traces downwards, or in the direction of electrode feed, and one movement is performed by the apparatus instead of several. The net result obtained by using plate or rod electrodes is that the construction of the apparatus may be appreciably simplified, as there is no need for the welding head travel mechanism and weaving-motion mechanism.

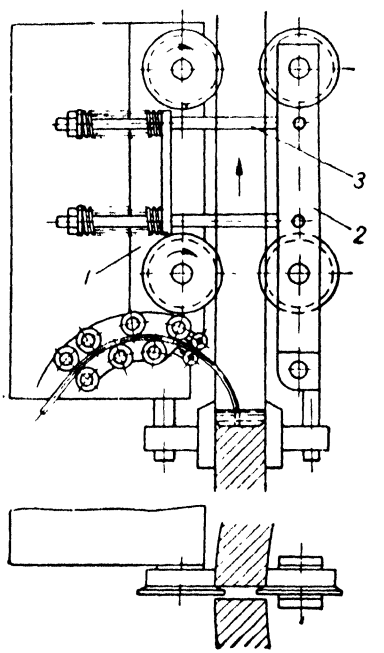

Fig. 145. Diagram of a trackless welding unit.

The A-480 welding set is less versatile and takes more power. That is why it has found a more limited use as compared with the A-372 universal welding set. Indeed, the latest makes of the A-372P, which can weld with plate electrodes, successfully supplant the A-480 on thicknesses up to 600 mm.

3. Trackless Electric Slag Welding Equipment

A salient feature of this type of electric slag welding equipment is that the welding head moves directly on the workpiece, dispensing with tracks, supports or electromagnets (Fig. 145). This type of welding apparatus usually has two trucks—one motor-driven *1* and the other non-driven *2*. The trucks are placed on either side of the workpiece and are connected by flat links *3* passed through the groove between the edges. This arrangement calls for an unobstructed groove all along the joint, while the joint gap should be at least 12 mm wide. As will be recalled, conventional tacks in electric slag welding cannot be used; in their place crescent-shaped clamps tack-welded to the workpiece on the side of the non-driven truck have to be resorted to. The inside dimensions of a clamp should be sufficient for the non-driven truck to travel freely in welding.

The flat links between the two trucks are part of a tension system.

They have powerful springs to hold the workpiece fast between the trucks and hold the rollers of the motor-driven truck tight to the workpiece and thus ensure the necessary friction for the truck to traverse the job. The truck reliably adheres to the surface of the work as the steel rollers have sharp knurling on their periphery and are properly heat-treated to high hardness.

The flanges of the rollers fit into the joint gap and are held tightly to one of the edges by a suitable device. In this way, the welding head can accurately follow the pattern of the joint in welding.

Examples of trackless welding equipment are provided by the A-306, the A-340 and the A-350 sets which have shown a good performance at the Krasny Kotelshchik Boiler-Making Works.

The A-306 is a single-electrode welding set (Fig. 146) intended for thicknesses up to 60 mm. The motor-driven truck carries the vertical travel (or traction) mechanism *1* and the electrode feed mechanism *2*. The two mechanisms are driven by a 0.25 kw electric motor *3*, the traction mechanism being coupled to the motor by an electromagnetic clutch. In this way, the traction mechanism can be disconnected at will, without stopping the motor, as may be required by variations in the level of the weld pool, much in the same way as in the A-314 track-riding set. The electromagnet clutch is the final control element in the automatic control of the weld pool level.

The motor-driven truck mounts an electrode guide which has a bending roller *4*, a flux batching hopper *5*, a control panel *6* and an electrode wire reel *7*. The weld is shaped by two water-cooled copper moulding shoes one of which *8* is attached to the motor-driven truck, and the other *9* to the trailer.

Welding speed with the A-306 may vary from 1 to 8 m/hr. Electrode wire 3 mm in diameter may be fed at the rate variable between 60 and 360 m/hr, and the welding current may consequently be as heavy as 800 a. The desired feed rate and welding speeds are adjusted by means of the change gears in the respective mechanisms. Electrode wire may be anywhere from 3 to 5 mm in diameter.

The A-340 is a single-electrode welding set (Fig. 147) designed for thicknesses up to 150 mm. Therefore, it incorporates a mechanism which manipulates the electrode in the groove in a weaving pattern.

Compared with the A-306, the A-340 has three separate drives: one drive *3* for vertical travel; another drive *2* for weaving motion; and a third drive *1* to feed wire into the welding zone. From this point of view, the A-340 is similar to the A-372. The vertical travel mechanism having a separate drive, the level of the weld pool can be automatically controlled, as in the A-372 set. Welding speed with the A-372 may be varied between 1 and 4 m/hr.

The A-350 (Fig. 148) is the most powerful and efficient of all trackless welding sets. It uses three electrodes and operates on the same principle as the A-340, except that it has a three-electrode instead of a single-electrode head of the type employed in the A-372 set. There-

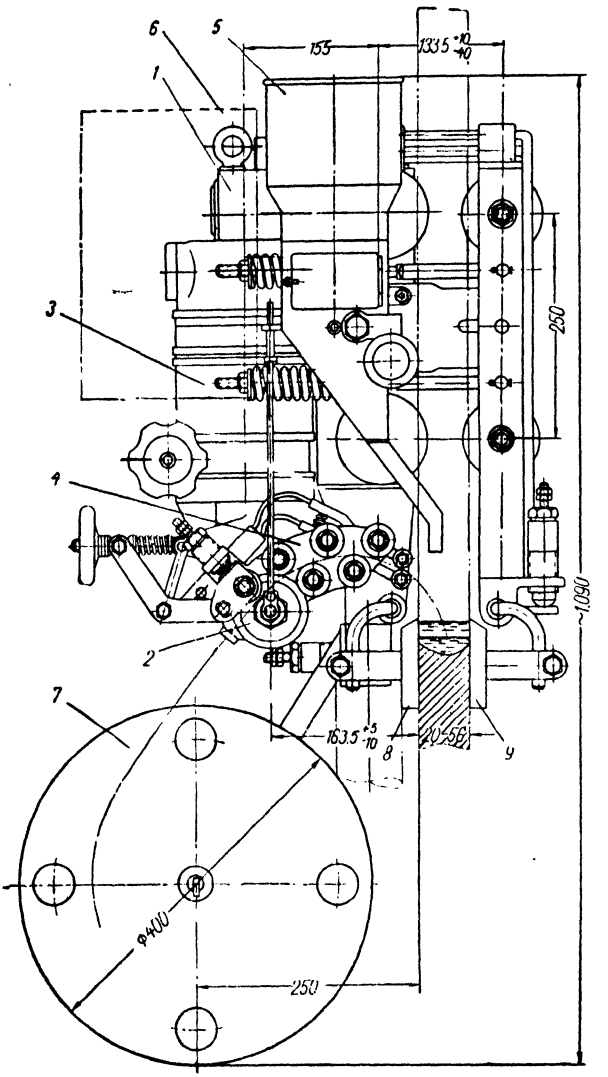

Fig. 146. Type A-306 single-electrode single-motor trackless automatic welder.

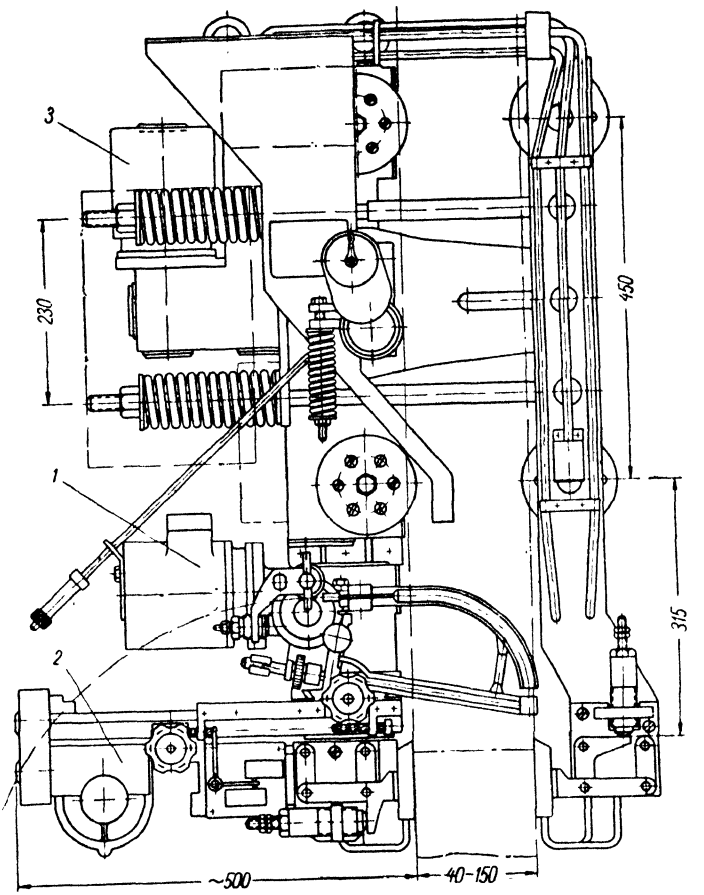

Fig. 147. Type A-340 single-electrode trackless automatic welder.

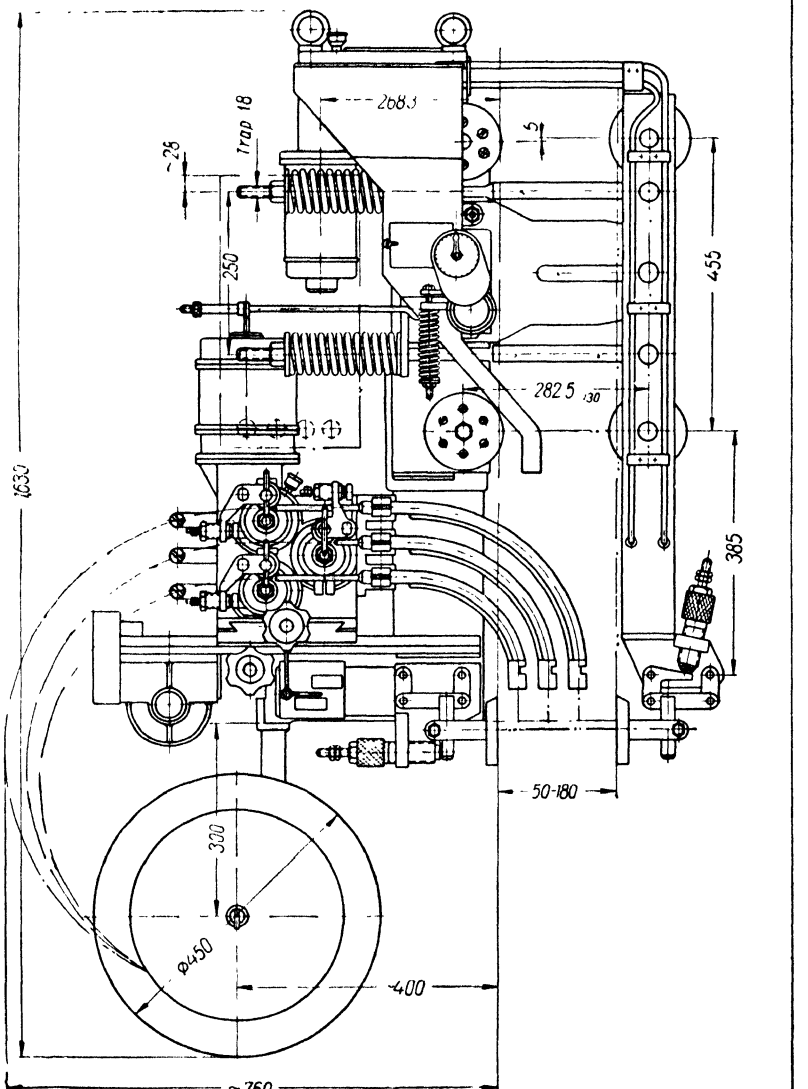

Fig. 148. Type A-350 three-electrode trackless automatic welder.

fore, on heavy sections it has a higher production rate than the A-340. On thicknesses up to 180 mm its welding speed is anywhere from 1 to 3 m/hr. The circuitry, including the automatic control of the weld pool level, three-phase power supply and control, is similar to that of the A-372 set.

4. Walking Magnet Welding Sets

These are the lightest and most portable of all electric slag welding sets. They are best suited for erection work on construction sites and for bulky jobs in hard-to-reach locations, where the heavy A-372 and A-350 sets cannot be operated so conveniently (for example, for press bedframes with walls up to 100 mm thick).

As a rule, walking magnet welding sets are of the single- or double-electrode type, without wire-feed and weaving-motion mechanisms, which fact reduces their weight and enhances their portability. Electrode wire is usually fed by an external feed mechanism through a metal hose.

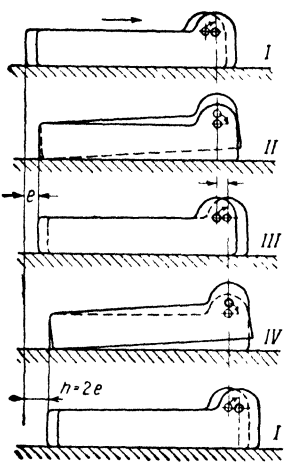

Fig. 149. Walking magnet in operation.

Walking magnet welding sets are held on the workpiece and moved across it by electromagnets. Their motion across the work resembles walking—hence their name. As has been established experimentally, this walking in small steps (up to 5 mm) does not affect the stability of welding and the quality of the weld. The operation of the walking mechanism is schematically shown in Fig. 149. One complete cycle consists of four stages (I through IV). The mechanism consists of two electromagnets *1* and *2* which are always energised and coupled by a crankshaft or an eccentric with an eccentricity *e*. Each centre of the crankshaft is hinged on to the appropriate electromagnet. As the crankshaft rotates, the magnets break away in turn from the work and move a certain distance in the direction of welding. The two magnets make one step each during a complete revolution of the crankshaft; the pitch being twice the eccentricity of the shaft ($h=2e$). The hinges connecting the eccentric to the magnets are found in the head portion of the magnets. Therefore, only the head portion of each magnet breaks away from the workpiece in the forward movement, and the magnets can easily overcome what small obstacles may come their way.

An advantage of the walking magnet system just described is that the breaking action of one magnet is imparted to the other mag-

net as a reaction, and the adhesion of the welding apparatus to the work is not impaired.

The welding speed can be varied either by changing the speed of the eccentric (that is, the rate of walking) or by varying the eccentricity (that is, the step of walking).

An example of a walking magnet welding set is the A-501 (Fig. 150) which is designed for welding corner, Tee and butt joints made

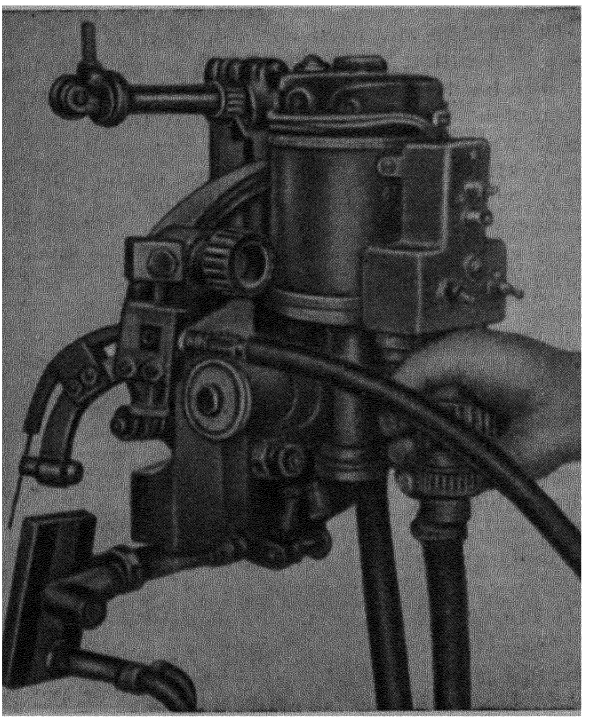

Fig. 150. Type A-501 [illegible] magnet automatic welder (general view).

in metal up to 100 mm thick. It is noted for its small size and weight (25 kg), a constant pitch of 2.5 mm and a speed of 3.5 to 20 m/hr which is adjustable by continuously varying the speed of the drive motor. The control is effected by a remotely placed push-button rheostat. For simplicity, the welding set has no automatic control of the weld pool level.

The A-501 uses one single-coil electromagnet and a double split magnetic circuit. As the two shoes of the electromagnet are attached to the different centres of the crankshaft, the walking action is such

as if there were two separate electromagnets. The apparatus is set up for a given type of weld by means of interchangeable units.

Welding is performed with one or two wire electrodes, 2.5 m in dia depending on the thickness of the workpiece. The change from one to two electrodes is effected by replacing the electrode guides.

The apparatus is accurately positioned along the joint by a system of tracer rollers which bear upon one of the sides in welding corner joints or follow a template placed parallel to the seam in welding butt joints.

The A-501 is mainly used to fabricate bedframes for heavy power presses employed in the automotive industry.

5. Sets for Electric Slag Circumferential Seams

The A-532 is a suspension-type welding set employed in the fabrication of high-pressure boiler drums and other thick-walled vessels and cylindrical jobs. As distinct from the sets intended for straight seams, the A-532 has no traction mechanism, as this function is performed by a roller stand or any other suitable positioner for rotating the work during welding.

The set (Fig. 151) is hinged onto the lifting beam of a gantry or any other support. In welding, its moulding shoe is held tight to the job by the weight of the set and a spring. The weld pool is formed anywhere on the side of the workpiece, so that there is an angle of from zero to 40° to the horizontal. The set uses a three-electrode welding head similar to that of the A-372 and fitted with an identical weaving-motion mechanism.

The moulding shoe has an attachment to provide an additional space for the slag pool or excess metal in closing the circular seam. The weld is backed up either by a copper ring or a moulding shoe. In both cases, they are water-cooled on the inside.

In contrast to the A-356 and A-532 suspension-type welding sets, modern sets for electric slag circumferential welds incorporate a mechanism for the vertical travel of the welding head, and their design very closely resembles that of track-riding equipment. This group may be exemplified by the A-401 (Fig. 152) and the A-470 (Fig. 153) which is a later model of the A-401. The two sets can weld circumferential seams on jobs with walls up to 450 mm thick. As has been found empirically, the thick walls and relatively small diameter of the workpiece make it necessary to impart to the welding head a vertical movement both at the beginning and at the end of the weld and to stop the job, or else the weld will not be closed appropriately. Therefore, the two sets incorporate vertical travel (traction) mechanisms similar to that of the A-372P set (Fig. 140).

Both the A-401 and the A-470 are mounted on a three-wheel truck *1* moved across the workpiece manually. The truck carries a slewing type column *2* and a rack. The automatic welding head *3* can travel

up and down along the rack at either the working or the idling speed. The vertical travel system and the traction mechanism are similar to those of the A-372 track-riding set. In setting and transit, the welding head can be swung out on the slewing column. The apparatus uses a three-electrode head *4* with extended electrode guides *5* so that circumferential joints near the very flange can be welded.

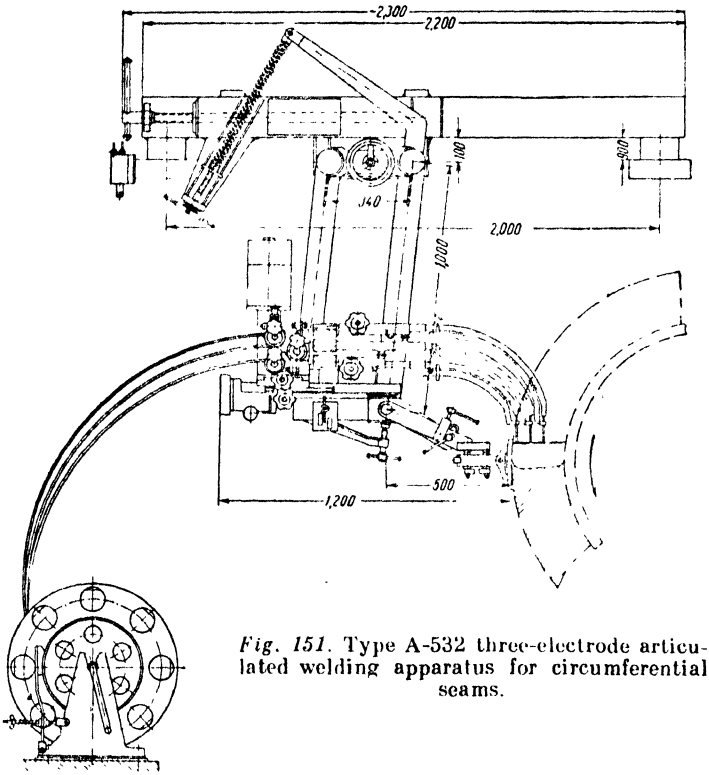

Fig. 151. Type A-532 three-electrode articulated welding apparatus for circumferential seams.

Like other welding sets for heavy sections, both the A-401 and the A-470 have a weaving-motion mechanism *6*.

The horizontal length of the electrode guides can be varied by a telescopic arrangement. This is done in setting up the apparatus for a given job size, in starting and closing circumferential welds, and in adjusting the electrode spacing to suit a given metal thickness. The horizontal length can be adjusted continuously by means of a rack-and-pinion actuated by a handwheel.

For welding heavy sections (up to 450 mm thick), the apparatus has an extended carriage so that the head can be moved in a weaving

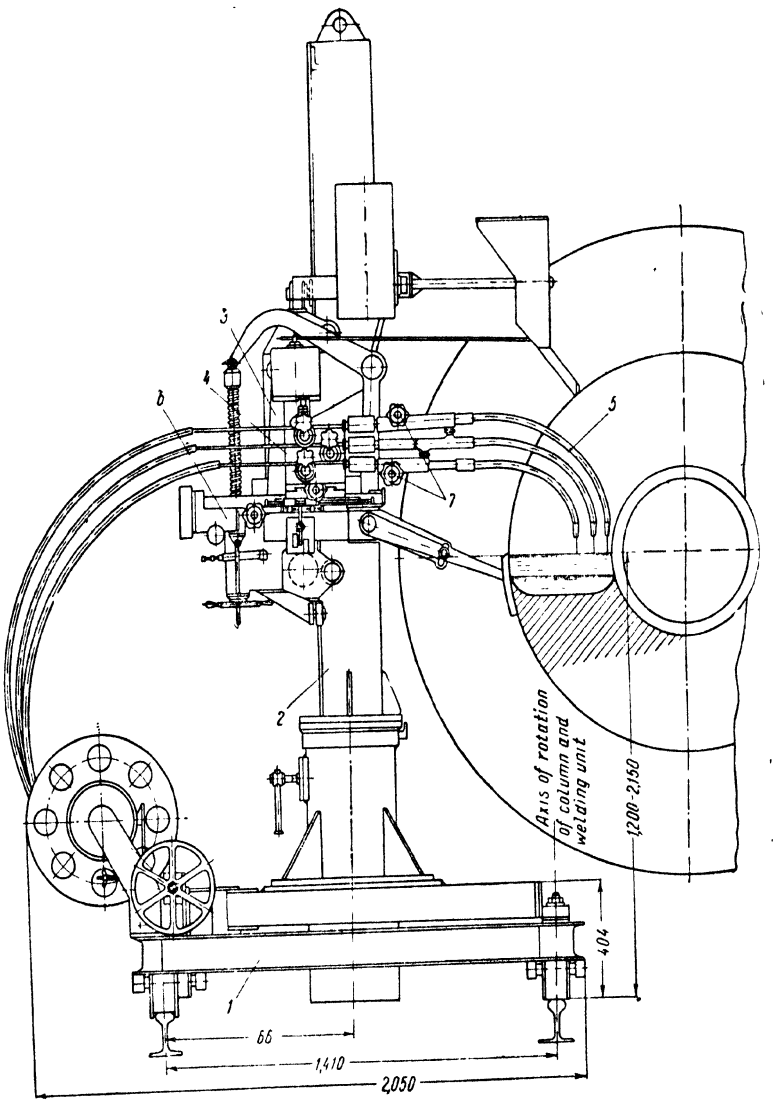

Fig. 152. Type A-401 welding apparatus.

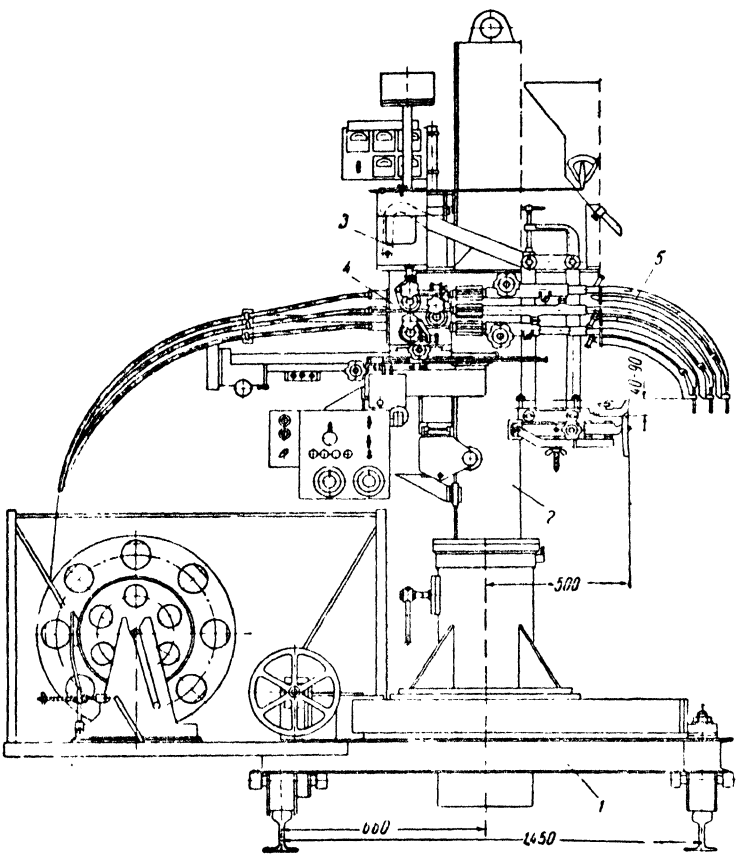

Fig. 153. Type A-470 welding apparatus.

pattern; meanwhile the moulding shoe is attached to a hinged suspension which enables the shoe to move a considerable distance in a horizontal plane.

It should be noted that the A-372P and the A-433, which are both versatile track-riding electric slag welding sets, can be easily adapted to welding circumferential seams. To this end, they can be fitted with suitable moulding shoes, electrode guides, and a suitable support. Indeed, the A-401 is a version of the A-372, adapted to making circumferential welds.

With suitable accessories and fixtures, the A-401 or the A-372 can weld both circumferential and straight seams. Fig. 161 shows an installation of this type.

All electric slag welding sets for circumferential seams have, as a rule, two electric motors for vertical movement. One of them rotates the workpiece in welding, while the other drives the welding head in a vertical plane.

6. Equipment for Electric Slag Welding with Plate and Rod Electrodes

As has been noted elsewhere, plate electrodes are recommended for heavy sections (up to 1,000 mm), welded with high values of current (9,000 a or more), while rod electrodes are best suited for hard-facing, butt (resistance slag) welding, and for remelting ingots and forgings by the electric slag process.

Plate electrodes may be employed on any heavy-type track-riding set after its welding head and moulding shoes have been appropriately readjusted.

Welding sets using plate or rod electrodes differ in some aspects from those employing electrode wire, the principal difference being the absence of all other movements except for downward travel, which coincides with the direction of the electrode feed.

Another difference is in most cases the absence of sliding contacts to carry current to the electrodes. Instead, use is made of more reliable stationary terminals—a self-evident advantage, especially when high values of current are employed.

On the whole, these sets are simpler and more reliable than the apparatus using electrode wire discussed above.

A drawback of welding sets using plate electrodes is that the maximum length (height) of the joint is limited by the allowable length of the plate electrode, and is, therefore, comparatively small. In practice, it does not exceed 1 to 1.5 m. From this angle, welding with electrode wire is more versatile, as it imposes no restrictions on the length of the joint, except when the apparatus employed has straight, rather than curved, electrode guides (the A-480 set) and the allowable length of a straight weld is equal to that of the electrode guides.

As has been noted, the electric slag process is an efficient method of hard-facing, especially when wear or heat resistant alloys have to be applied to the cutting faces of various tools. This operation is usually performed by special sets fitted with chills, instead of moulding shoes, and using rod electrodes. An example in point is the automatic set which hard-faces the tong bits of ingot cranes.

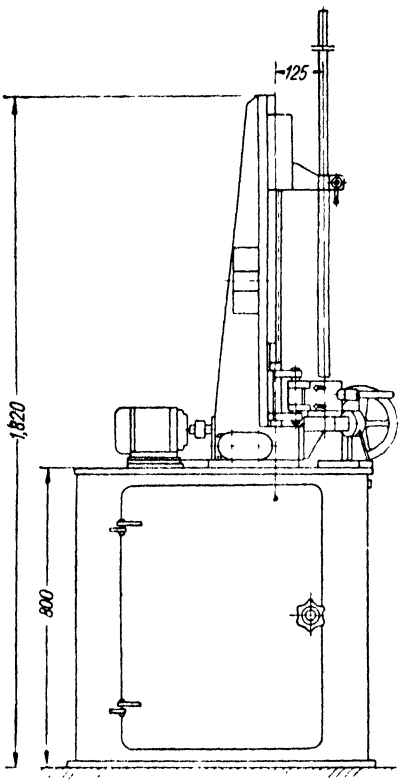

Fig 154 Apparatus for hard-facing of tong bits for ingot cranes

The tong bits are hard-faced with electrode rods 14 to 20 mm in diameter, made of steel 3 × 288. As in casting, the deposited metal is moulded by a chill.

The hard-facing set (Fig. 154) incorporates (1) a jig to clamp the workpiece to be hard-faced, fitted with a split copper chill water-cooled on the inside; (2) an electrode-feed mechanism; (3) a bedframe and (4) a control cabinet built into the bedframe.

The electrode-feed mechanism is a vertical carriage whose lead screw is actuated by an induction motor via a reduction gear. The carriage mounts a snap-action electrode clamp which also carries the welding current to the electrode.

The desired rate of electrode feed is adjusted by means of change gears and can be anywhere between 0.8 and 8 m/hr. The actual average rate of electrode feed is somewhat lower, and varies with the voltage at the electrode. The rate is controlled automatically by a "start-stop" circuit which stops or starts the drive motor in step with voltage fluctuations. Thus, the welding set has a simple voltage regulator which maintains the welding voltage constant within certain limits.

As will be recalled, similar voltage control circuits are employed in submerged arc welding machines powered by transformers with a drooping characteristic. The welding set in question also draws its power from a similar ТСШ-1000 transformer.

Provisions are made both in the circuitry and mechanical design of the set for an automatic stop as soon as the desired thickness of

the deposited metal has been reached. This condition is sensed by an electrical prod placed in the chill at the required height. At the predetermined height, the weld pool closes the circuit through the prod to the appropriate switch which disconnects the electrode feed motor and cuts off the welding current.

Similar sets can also be employed for welding, but the rods are usually replaced by plates. One such set is the A-550 single-phase

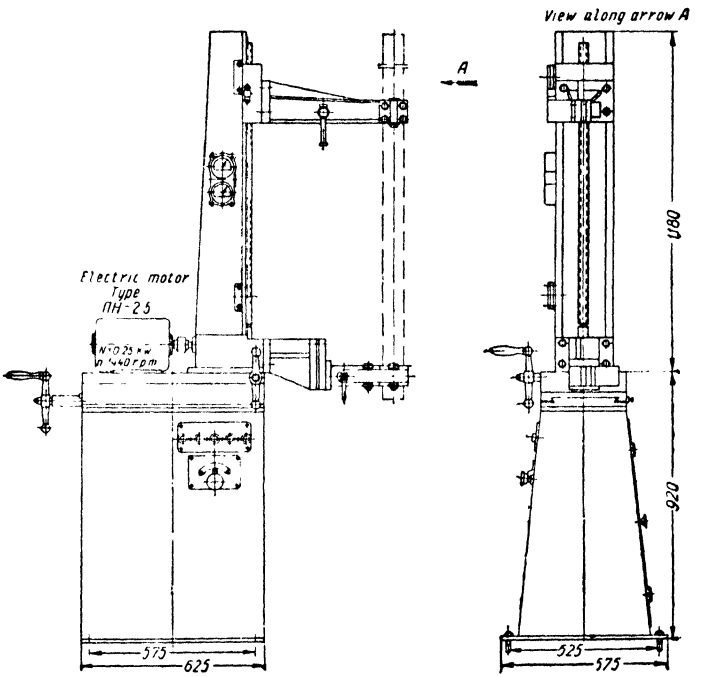

Fig. 155. Type A-550 apparatus for electric slag welding with plate electrodes.

machine (Fig. 155) which is specially designed for welding titanium and its alloys in sections from 50 mm square to 150 × 400 mm.

The electrode is a titanium plate as wide as the joint to be welded (from 50 to 150 mm), while its thickness may vary from 10 to 20 mm, depending on the joint gap.

The physical properties of titanium have necessitated some changes in the current-carrying circuit to the electrode. The point is that titanium has a very low electrical conductivity, and if the current were carried to the plate electrode only through one fixed terminal in the top clamp, the plate would be strongly heated because of its large length and the heavy current (up to 2,500 a) employed. Heated titanium is easily contaminated by the ambient atmosphere, and the

weld metal may well be of inferior quality. As a way out, an auxiliary sliding contact is placed immediately above the joint, and the actual "dry" length of the electrode does not exceed 400 mm.

The other features of this apparatus are similar to those of the set described previously, except that the rate of electrode feed may be adjusted both in steps and continuously over the total range 0.8-10 m/hr.

A similar welding machine can be employed for welding bars and flanges of stainless steels and refractory alloys. In this case, no sliding contact is necessary.

7. Sets for Welding with Consumable Electrode Guides

The operating principle of sets using consumable electrode guides is described in Chapter IV. These sets are simple and compact, as they have no traction mechanisms or moulding shoes. In fact, a welding set employing consumable electrode guides incorporates only an electrode-feed mechanism and a current-carrying path to the electrode guide.

The main uses for these sets are large-size and bulky jobs of intricate design at the joint, such as hydraulic turbine blades, ship stems, etc., where it is more advantageous to use portable equipment mounted above the joint directly on the workpiece.

One such apparatus is the A-545 four-electrode set (Fig. 156). In effect, this is a multiroll electrode feed mechanism fitted with a clamp by which it can be attached to the work. The set is clamped to a removable strip which is tack-welded to the workpiece in advance. The advantages offered by such an arrangement are that (a) the setting-up time is reduced, as removable strips and consumable electrode guides can be fastened on the job in advance, and (b) the welding set and clamp can be more simply constructed, as that does not depend on the design of the job.

Electrode wire is fed into the set from reels placed on the floor or on an auxiliary platform from which the wire passes over rolls, through flexible steel pipes and into the passages in the electrode guide. Coupling nuts fasten the upper hose end to the feed mechanism and the lower end to the electrode guide.

The flexible metal hoses employed in the set make it unnecessary to exactly position the set relative to the joint, and there is no need for the mechanisms that would be essential otherwise. All this adds to the simplicity of the A-545 both in construction and in service.

The roll assembly of the set can feed from one to four wires 3 mm in diameter. The wires are fed simultaneously and with the same speed. The electrode feed mechanism is driven by a 0.25 kw d. c. electric motor via a reduction gear. The feed rate may be varied be

tween 60 and 120 m/hr by changing the speed of the motor between 1,200 and 2,400 r.p.m.

The drive rolls of the feed mechanism are seated on a common splined shaft and their spacing may be varied to suit the thickness of the workpiece. In the extreme case of welding with four electrodes, the workpiece may be as thick as 200 mm and the current as heavy as 2,000 a.

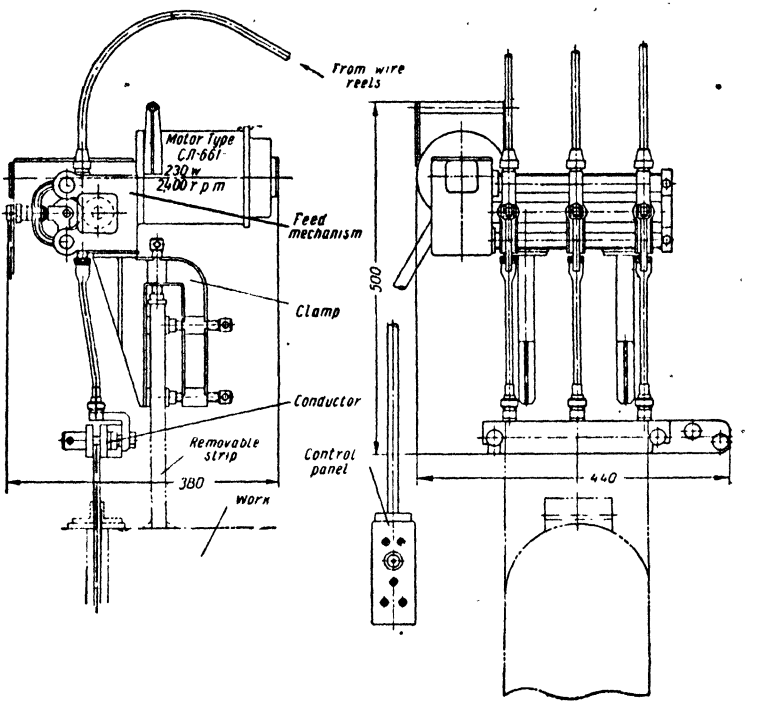

Fig 156. Type A-545 apparatus for electric slag welding with consumable electrode guides.

The rolls and electrodes are not insulated electrically from one another and have the same polarity in welding. This feature has also served to simplify the construction of the set and, especially, of the consumable electrode guide. The set draws its power from a single-phase welding transformer with a straight-line volt-ampere characteristic.

8. Electric Slag Welding Outfits

Welding equipment can be efficiently utilised if supplemented with the requisite accessories and fixtures.

A welding set complete with accessories and fixtures forms a welding outfit. The complexity of welding outfits may vary within

broad limits, as it is a function of many factors. These are the size of the workpiece, the production schedule of the welding shop, employ-

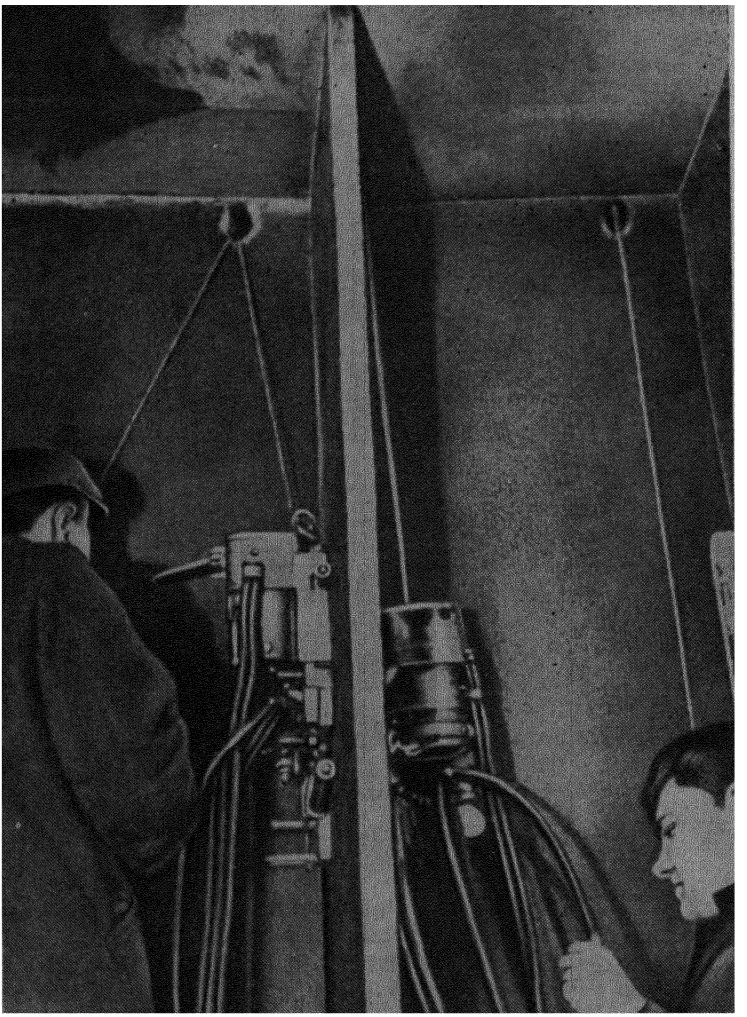

Fig. 157. A press frame being welded by a walking magnet welder.

ment of the outfit in the field or in the shop, and the extent of mechanisation in auxiliary operations.

In most cases, the functions of the accessories and fixtures of a welding outfit are as follows:

(1) To position, hoist and convey workpieces (which is performed by positioners or hoisting and conveying facilities);

(2) To make the work of the operator easier and safe, especially when attending to apparatus moving at a large height;

(3) To impart auxiliary movements to the apparatus or the workpiece (such as rotation in welding circumferential seams);

(4) To supply power and water;

(5) To preheat the workpiece, if necessary.

In the simplest case, a welding outfit is an assembly and welding stand or several stands equipped with portable welding units, which may be of the track-riding type, such as the A-372, the A-314 or the A-433; of the trackless type, such as the A-306, the A-340 or the A-350, or of the walking magnet type.

Light-weight equipment (the A-314, the A-433 or the A-501) can be easily transferred from one joint or stand to another by hand. Heavier sets (the A-350, the A-372, and the like) are carried about and mounted on the joint by means of a workshop crane or local hoisting and conveying facilities.

The welding outfit described above is typical for the small scale or piece production of large-size weldments.

The set-up of a welding outfit remains the same when walking magnet sets are employed. An example in point is the outfit for the electric slag welding of bedframes for heavy presses (Fig. 157) in which use is made of the A-411 and the A-501 single-electrode walking magnet sets. The photograph shows a stiffener 3.5 m long and 60 mm thick being welded to a bedframe. The two sets are placed on either side of the stiffener and have a common weld pool. The advantages of welding with two sets and a common weld pool are (1) a production rate which is twice as high, (2) simplified moulding of the weld as no backing-up blocks or strips are required, and (3) reduced stresses and the diminished danger of crystallisation cracks, as the workpiece is heated more uniformly.

The stationary welding outfit shown in Fig. 158 is very simple in design and convenient in operation. It is used for welding longitudinal seams on short tank shells. It consists of a plating block, an A-372 welding set (with a fixed rack column), and a power source.

A less happier combination is shown in Fig. 159. This is a welding outfit intended for welding longitudinal seams on boiler drums which uses an A-340 welding set. The outfit, though simple, is inconvenient in operation, as the operator has to work while standing on a portable ladder. While a portable ladder may be tolerable in field conditions, it is entirely out of place at a factory, as it does not ensure the desired safety and convenience of work. In short, the outfit is simplified at the expense of reliability and safety.

On the other hand, simplified outfits are acceptable when the length of joints does not exceed 1.5 to 2 metres, especially when the welding set is of the light-weight portable type, such as the A-314, the A-433,

or the A-411. In effect, the outfit may well be a welding stand without any other accessories. In repetitive work involving welds of considerable length, simplified outfits cannot be recommended, as their efficient operation is impossible without a whole range of accessories. As for circumferential seams simplified outfits are entirely out of the question, as the workpiece has to be rotated in welding, which requires special, sometimes rather complicated, systems.

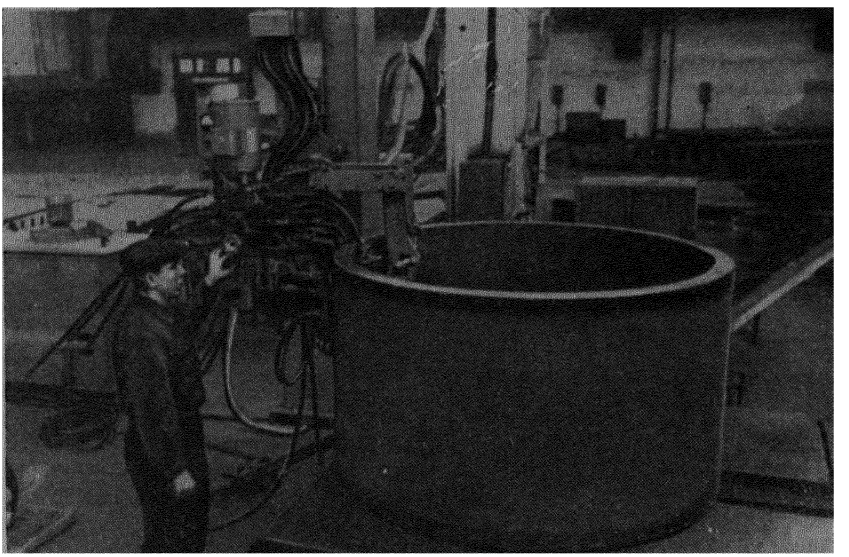

Fig. 158. Electric slag welding unit for short vessel shells

Here are a few examples of modern welding outfits employed in heavy engineering.

Outfits for straight seams. Soviet factories turning out high-pressure boilers in quantity use well-mechanised special-purpose outfits for welding longitudinal and girth seams on boiler drums by the electric slag process.

Fig. 160 shows an outfit for butt-welding longitudinal seams on boiler drums 900 to 2,200 mm in diameter, 60 to 160 mm wall thickness, and up to 6.5 m long. In most cases, the shell of a boiler drum is made up of two pressings welded together by two longitudinal seams on the opposite sides. When the two seams are made simultaneously, the production rate is raised and the longitudinal distortions of the drum are reduced to a minimum as the welds are located symmetrically.

The welding outfit incorporates two electric-driven hoists (or lifts) *1* carrying A-372P welding sets *2* and a stationary welding stand *3*

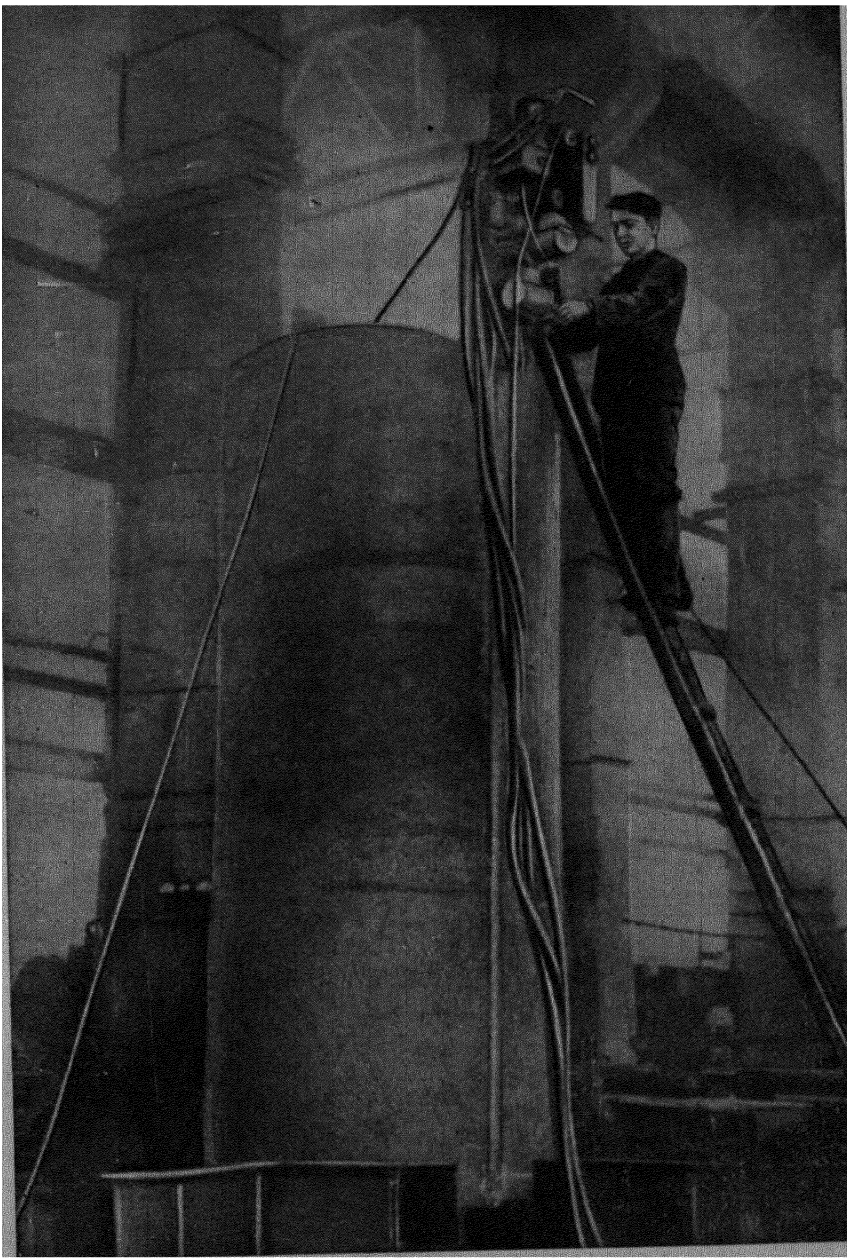

Fig. 159. Welding a boiler drum with the A-340 apparatus.

where the drum *4* to be welded is mounted. The hoists follow the design of passenger lifts and have cages *5* for welding operators. The cages also accommodate reels of electrode wire, the working supply of flux and a push-button control panel for the lifts. The vertical rail columns *6* carrying the welding sets *2* are attached both at top and bottom to the shafts of each lift.

The slewing type column can be moved a certain distance in any direction in a horizontal plane and positioned parallel to the joint

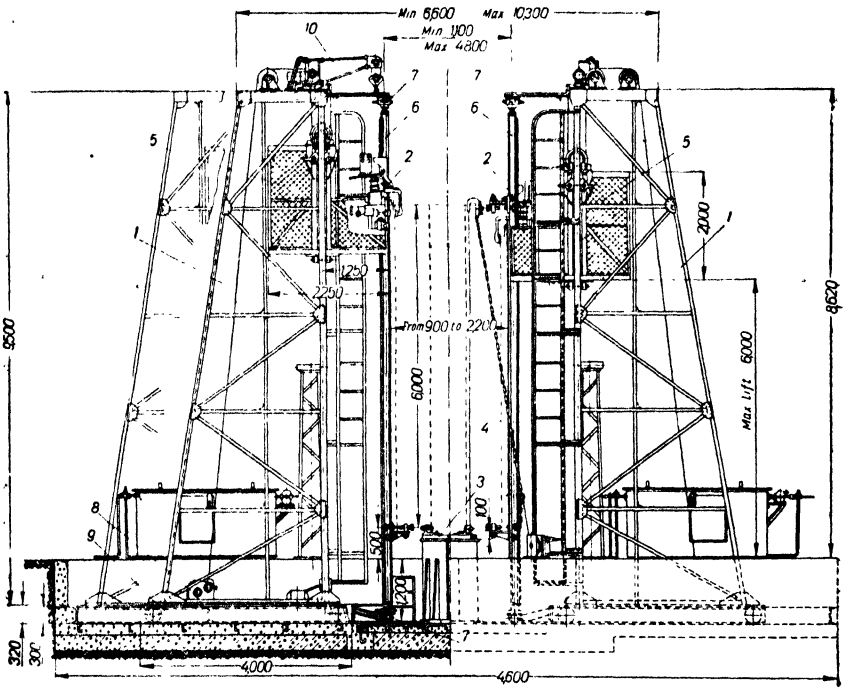

Fig. 160. Electric slag welding unit for longitudinal seams on boiler drums.

in case the latter be twisted. To this end, each of the two hinges of the rail column has a twin carriage *7*. The carriages are moved by hand. The absence of remote-controlled electric drives in them is a serious drawback complicating the adjustment of the rail.

The cab-lifting mechanism *8* and the vertical travel mechanism of the A-372 welding set are not linked up and are controlled separately; the A-372 moves continuously with an automatically controlled speed varying with the level of the weld pool, while the lift can be stopped and started by the operator as the weld progresses. In principle, the control of the lift could be automated by coupling the lift mechanism electrically to the A-372 set. However, it would be

redundant, as the welding apparatus advances very slowly (at the rate of up to 3 m/hr), and the welder can easily control it at will. The speed of the lift cabin is usually set to 4 or 5 m/min. The hoist is mounted on motor-driven truck *9* moving along a horizontal track to or from the stand, where the workpiece is set up. This travel of the truck is necessary for safety when placing the workpiece on, or removing it from, the stand by a crane and when adjusting the lift for a given drum diameter.

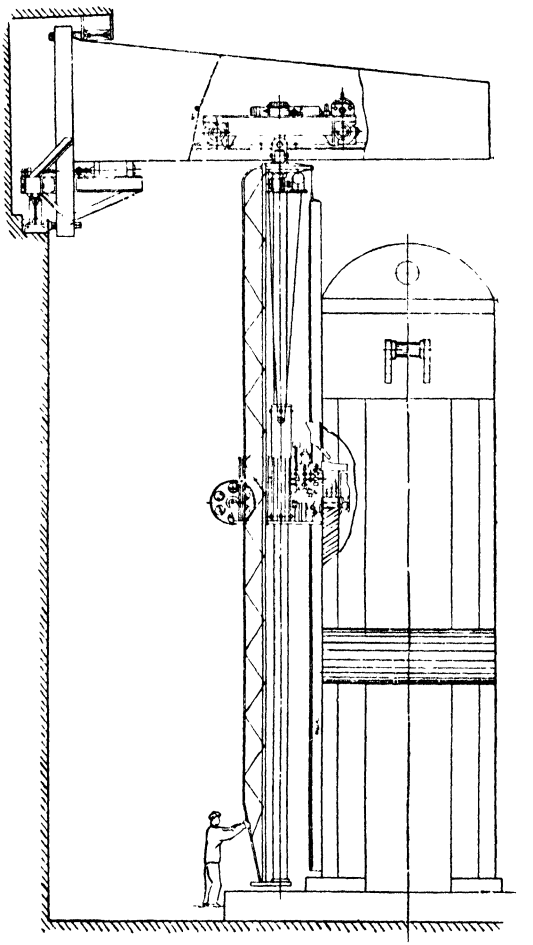

Fig. 161. Crane-type universal unit incorporating an A-372 welding apparatus.

The top of the lift structure carries a small jib *10* and motor to hoist to the operator's cabin the necessary supplies (wire, flux, etc.) during welding, without stopping the apparatus and lowering the cabin to the floor.

Each lift has three electric drives (apart from the drives for the A-372 welding sets): (a) to lift the cabin with a speed of 5 m/min; (b) to drive the lift on the track with a speed of 1.8 m/min, and (c) to handle welding supplies.

The procedure with the outfit is as follows.

An assembled boiler drum is placed on the stand *3* by a crane and is clamped in the vertical position; the two lifts *1* approach the drum; the rail columns *6* are adjusted by means of the end (upper and lower) trucks *7* so that they run parallel to the joints, and the outfit is ready for welding. After welding, the lifts are drawn aside, the welded drum is removed from the stand, the welding heads are lowered at idling speed, and the outfit is ready to receive another workpiece.

Thick-walled and large-size articles (such as power press bedframes and other heavy machine parts made up of steel plate, castings or forgings joined together by corner or butt welds up to 200 mm gauge and up to 7 m long) can be advantageously welded on universal welding outfits of the crane (Fig. 161) or tower (Fig. 162) type.

Each outfit has a tall rail column carrying an A-372 welding apparatus. The column and welding apparatus in the outfit shown in Fig. 161 can be moved about and placed on joints without the aid of shop cranes, as they are suspended by hinges from the truck of a bracket crane. One crane can service several welding stands placed along the rail track beneath the crane, thus extending the scope of setting-up and welding done at a time.

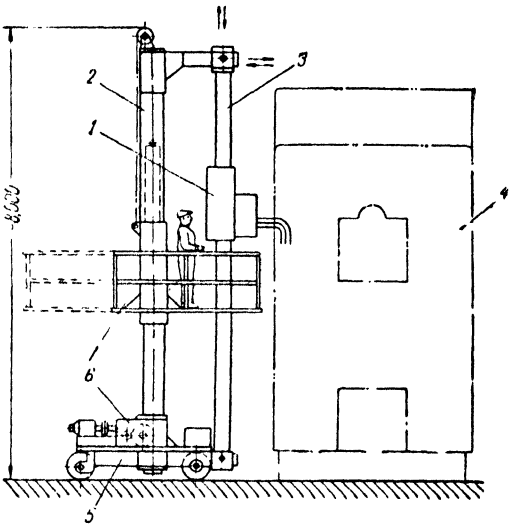

Fig 162. Tower-type universal unit incorporating an A-372P welding apparatus:

1—welding apparatus; *2*—load-bearing tower; *3*—rail track for welding apparatus; *4*—workpiece; *5*—truck, *6*—lift for operator's cab; *7*—lifting and rotating cab.

A welding stand is a block on which the workpiece can be assembled and welded. If the workpiece is assembled and welded in stages, i.e., the component units are first assembled and welded and then the bedframe is assembled of the welded units, several stands have to be provided, as the welding operations should be performed in a definite sequence.

The rail column is fitted with a lift for the operator who can thus attend to the welding apparatus at any height above the floor. The lift drive is mounted at the top of the column.

If for one reason or another the column cannot be coupled to the lift, the operator's station can be arranged on a separate mobile hoist of telescopic construction, similar to those employed in the repair of overhead lines or tall buildings. Mounted on adjustable castors, such hoists can traverse the plating block in any direction. The experience of the Ilyich Works in the town of Zhdanov points in favour of these hoists.

A tower-type outfit (see Fig. 162) differs from the crane type in the way it moves about in the shop and in the hinge suspension of the slewing column. Instead of a bracket crane, it uses a self-propelled

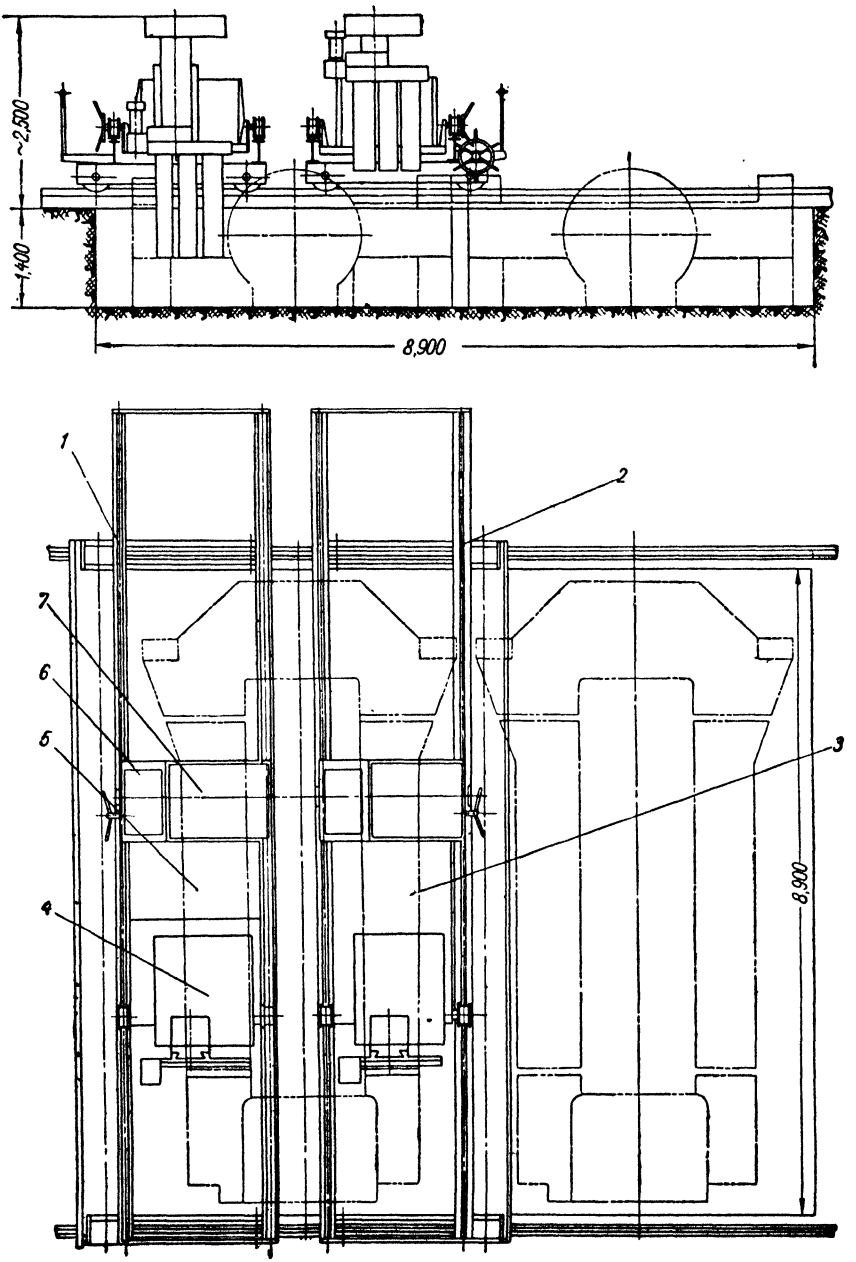

Fig. 163. Welding unit for rectangular heavy sections;
1, 2—jibs; *3, 5*—trucks; *4*—A-480 welding apparatus; *6*—control cabinet; *7*—transformer.

truck riding the plating block or ground-laid track. The slewing column is hinged at both ends onto the load-bearing tubular column of the tower. The two (upper and lower) hinges are fitted with twin end trucks by means of which the rail column can be set parallel to the joint.

An outfit for rectangular sections (Fig. 163). The outfit is designed for welding large-size cast-welded structures, such as stands of heavy rolling mills measuring 1,000 mm square in cross section at the joint. The outfit uses two A-480 welding units mounted on trucks riding I-beam girders which can in turn move along ground-laid track, thus covering the entire welding floor of the shop. Externally, the outfit resembles an overhead travelling crane with a welding apparatus instead of a hoisting unit. Besides the welding apparatus, each truck carries a TMG-3000-3 three-phase welding transformer and electric control cabinet.

On thicknesses up to 600 mm the A-480 welding apparatus may be replaced by the A-372P universal set using plate electrodes.

Outfits for circumferential welds are suitable for welding girth seams on boiler drums, hollow shafts for hydraulic turbines and generators, cylinders and rams for powerful hydraulic presses, and the like, having walls up to 250 mm thick. In a general case, the workpiece is a hollow cylinder of several courses with heads or flanges welded onto them. The weight of a workpiece may be as great as 200 tons; the outside diameter up to 3.5 metres; and the length up to 20 metres.

An outfit usually consists of three main components: a welding apparatus, a rotator, and a power source. Welding units may be of the A-401, A-470 or A-372P type.

The rotator should ensure the desired peripheral speed, which is equal to the welding speed, and have sufficient power and strength. The latter consideration is a major one, as the workpiece may sometimes weigh several dozen, even hundreds of tons.

The most common types of rotators are: (1) drive roller stands; (2) remodelled heavy-duty lathes; (3) end-face rotators with idle roller beds, and (4) centre-type rotators.

Lathes and end-face rotators with roller beds are most handy when the workpiece is of relatively small diameter but of heavy weight, such as heavy shafts for hydraulic turbines. In the case of a lathe, any machine with an A-372 or A-470 welding unit (without the truck) mounted on its carriage may be used. The only change that has to be made is to sharply reduce the speed of the drive.

Drive roller stands are by far the best choice in welding boiler drums (Fig. 164). It should be borne in mind that, as distinct from the other types of rotators, roller stands do not guarantee against the axial movement of the workpiece. It would therefore be advisable to fit them with end-face thrust rollers.

Centre-type rotators which are the simplest of all are best suited

for welding girth seams on jobs of relatively small weight and size (Fig. 166).

Here are a few examples of actual outfits for girth seams.

A boiler welding outfit (Fig. 164). The outfit is versatile, as it can be employed for welding thick-walled (150 mm) drums by the electric slag process and relatively thin-walled (up to 40 mm) drums by submerged arc welding. To this end, the outfit incorporates a conventional Type АБ or ТГЦ-2 arc welding head *1* or tractor-type welding unit and a Type A-532 welding unit *2* for electric slag welding.

The double set of welding facilities enables the outfit to handle drums ranging widely in diameter (from 1,000 to 3,200 mm), thickness (from 10 to 180 mm), length (up to 14 metres), and weight (up to 100 tons).

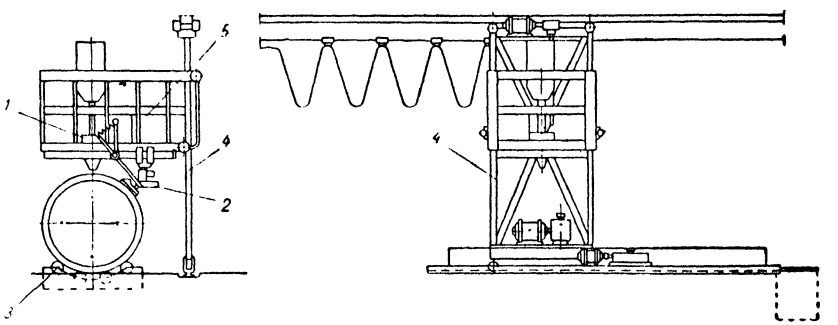

Fig. 164. Welding unit for boiler drums.

1—arc welding head, *2*—electric slag welding apparatus; *3*—roller stand; *4*—two-wheel truck; *5*—lifting platform

Its uses include (1) the welding of outside girth and longitudinal seams by the automatic multi- or single-pass submerged arc method; (2) the sealing of inside girth and longitudinal seams with the tractor-type welder, and (3) the welding of girth seams on thick-walled drums by the electric slag process.

The standard equipment of the outfit includes (1) a drive roller stand to mount the workpiece; (2) a self-propelled two-wheel truck with a lifting platform; (3) a Type АБ arc welding head (developed by the Welding Institute) or a ТГЦ-2 welding head (developed by the Central Heavy Engineering Research Institute) mounted on the platform of the two-wheel truck; (4) an A-532 electric slag welding unit for girth seams, suspended from the platform of the two-wheel truck; (5) a tractor-type welding machine for inside longitudinal and girth seams; (6) power sources; (7) switch gear cabinets and control panels.

The drives of the two-wheel truck and roller stand have reduction gear boxes for the working and idling speeds. The change from one

to the other is effected by a remotely controlled electromagnetic device. The idling speed is fixed at 10 m/min, while the working speed, which is equal to the rate at which outside longitudinal seams are

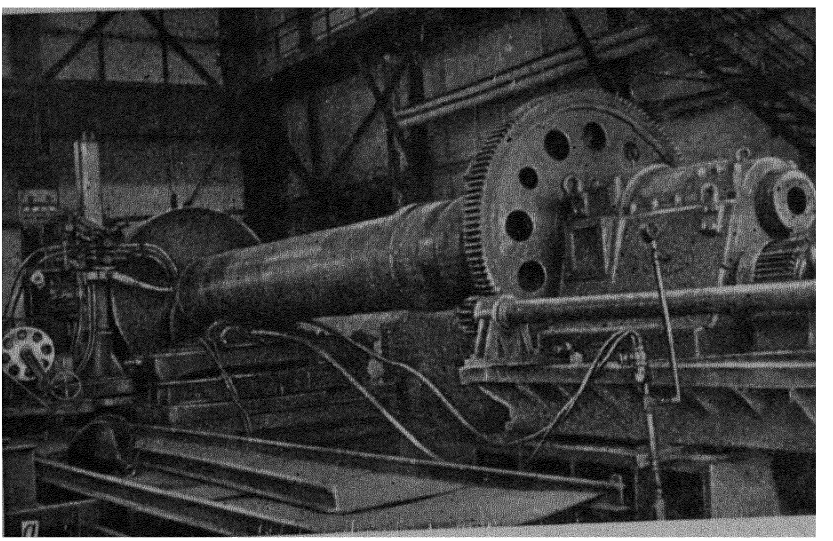

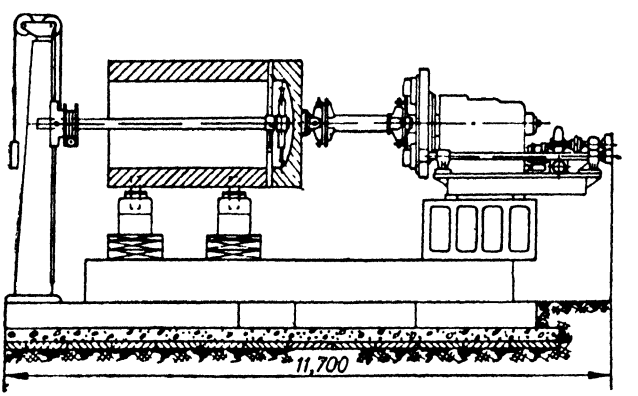

b

Fig. 165. Welding unit:
a—for shafts of hydraulic turbines; *b*—for cylinders of power presses (diagram).

welded, can be adjusted continuously by varying the speed of the motor anywhere from 5 to 50 m/hr. The idling peripheral speed of the roller stand is 5 m/min, and the working speed, from 5 to

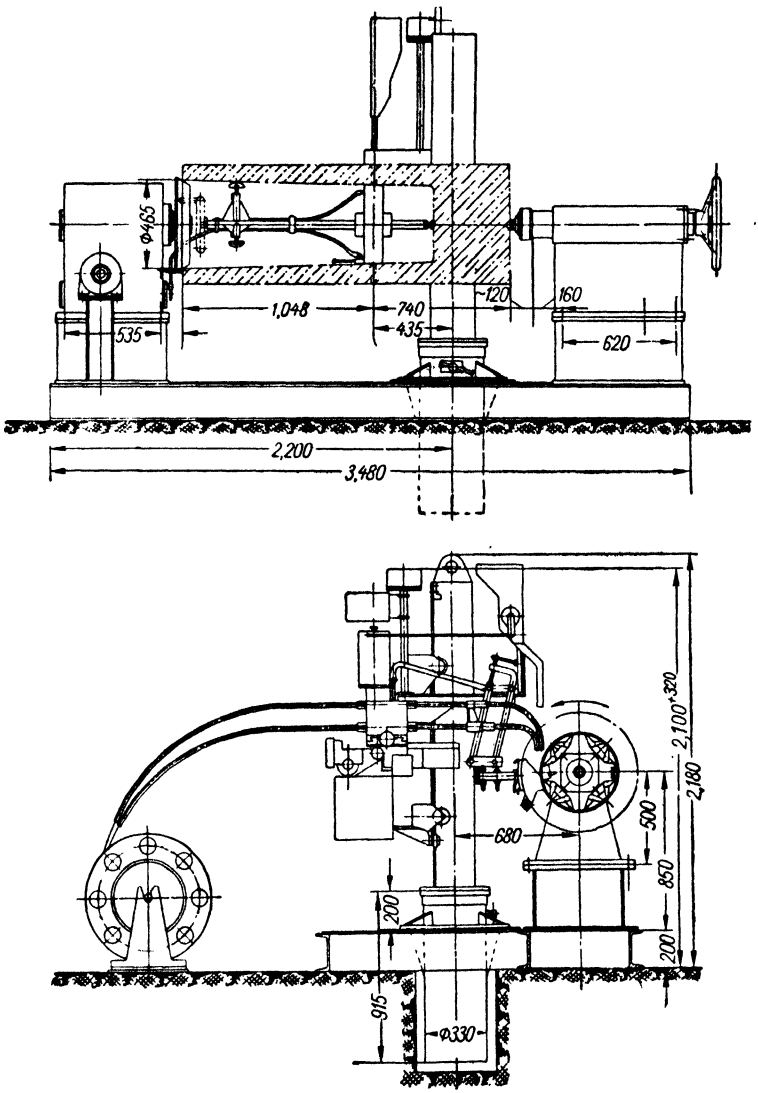

Fig. 166. Welding unit with centre type rotary positioner for cylinders.

40 m/hr. In welding girth seams by the electric slag process, the speed of the roller stand is controlled automatically from 1 to 10 m/hr, depending on the variations in the level of the weld pool.

The outfit for welding hydraulic turbine shafts and hydraulic press cylinders (Fig. 165) employs the A-470 welding unit described earlier.

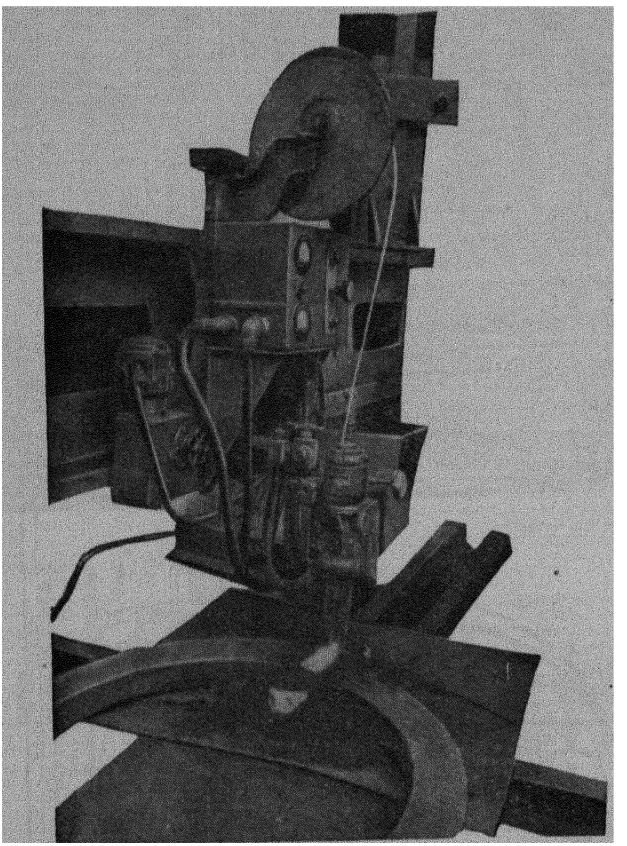

Fig. 167. A flange being electric slag welded by a tractor-type welding machine.

Its rotator, whose speed can be controlled automatically, is a remodelled lathe fitted with a roller bed. As an alternative, the outfit may employ a special end-face rotator with a roller bed.

The outfit shown in Fig. 166 is intended for welding girth seams between shells and heads of thick-walled steel cylinders fabricated on a mass scale. The outside diameter of a cylinder is 620 mm, and the walls are 110 mm thick.

The outfit incorporates an A-372 welding apparatus, a centre-type rotator, and a power source. The rack rail can be swung sideways in hoisting and conveying. The fact that the outfit has to handle repetitive jobs of a relatively small size has made it possible to employ a special-purpose centre-type rotator without intermediate supports.

A cylinder comes in for welding assembled by means of clamps, with a back-up copper ring inserted inside. For uninterrupted operation, the outfit has at least three back-up rings, one being used in welding, another in assembly, while the third one is being taken apart after welding.

Apart from special-purpose welding units, use may be made of portable semi-automatic welding units, Type АБС welding heads, etc., in which the wire is fed into the weld pool without being moved vertically during welding.

The electric slag process can be performed with submerged arc welding equipment in two cases: (a) to repair steel castings; and (b) to butt-weld heavy-gauge square or round bars and flanges (Fig. 167). In the first case, no other equipment is required except for a semi-automatic welding unit or a welding head and a power source. In the second case, moulding devices have to be provided so as to cover the future weld on every side, except from the top. The top must be left open for the electrode and the slag pool. In most cases, the moulding device is a copper chill water-cooled on the inside. Another possibility is a fusible steel mould.

Chapter VII

POWER SOURCES AND AUTOMATIC CONTROL IN ELECTRIC SLAG WELDING

1. Power Sources for Electric Slag Welding

The fundamental difference between the electric slag process and arc welding is the absence of any visible arc in the former. As a result, there is no need for the welding circuit to be able to re-establish an arc reliably when operating on a. c.; nor there is any need for the no-load voltage to be accurately matched with the resistance of the welding circuit. A quick transition from arc to slag welding conditions calls for conditions intolerable for an a. c. arc: low no-load voltage and resistance which shunts the arc gap. These conditions can be provided by using transformers with a straight-line volt-ampere characteristic, which are more advantageous than arc-welding transformers because of smaller weight, increased efficiency, and a near-unity power factor.

As the welding circuit has a very low inductance at the beginning of welding, the electric slag process can quickly and reliably reach a steady-state condition with the wire or plate electrode being fed at a low rate.

Another advantage of the constant-voltage transformer is that it facilitates the self-regulation of metal heating and melting, thus simplifying the selection of welding conditions.

Both in electric slag and arc welding, there is an almost proportional relation between the energies spent to melt the parent and filler metal. An increase in the amount of filler metal fed into the welding zone results in an increase in the welding current and the depth of the weld pool. This also entails changes in the crystallisation conditions of the weld and the danger of crystallisation cracks. If necessary, the amount of filler metal fed into the welding zone may be increased without an accompanying increase in the welding current. This can be done by drawing power from a source operating on higher than commercial frequencies. Due to the skin effect, the resistance of the electrode wire above the pool will rise, and the melting rate will be increased. Thus, with a wire 3 mm in diameter and an 8,000-

c.p.s. rotary converter, the resistance of the electrode above the pool will more than double.

The use of high frequencies makes it possible to reduce the size and weight of welding transformers. A transformer can easily be built into a welding unit, thus appreciably simplifying the supply of power to the welder.

In the case of a rotary generator, the load on a three-phase supply line can be balanced better, and the welding voltage can be conveniently regulated at will by varying the field current of the generator. This applies equally to d. c. generators.

When necessary, power for electric slag welding may be drawn from regular d.c. welding generators. The best is the Type ПСМ-1000 multioperator generator. However, it is not advisable to bring ballast resistors into circuit. Instead, it is a good plan to resort to a straight-line volt-ampere characteristic.

In most cases, it is preferable to operate on the commercial frequency and to employ constant-voltage welding sources.

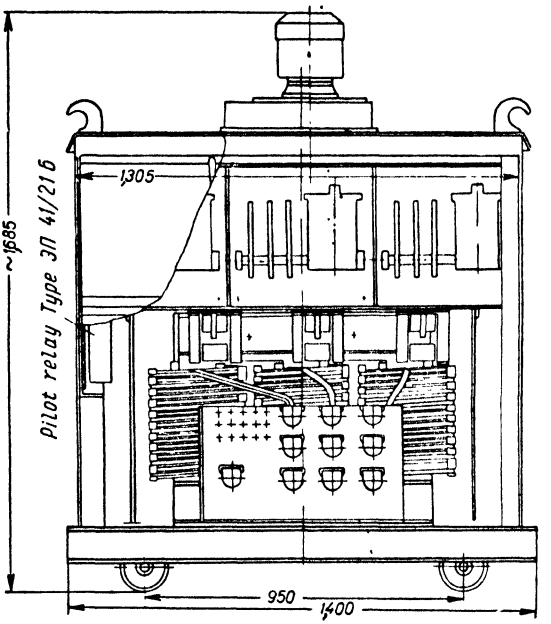

Fig. 168. Type ТШС-1000-3 three-phase transformer for electric slag welding.

Heavy sections welded by the electric slag process usually involve the use of several wire or plate electrodes. The A-372P welding unit developed by the Paton Electric Welding Institute may use three electrodes and draw its power from a three-phase transformer. Three-phase power sources may also be advantageously employed when the number of wire or plate electrodes is a multiple of three.

The ТШС-1000-3 and ТШС-3000-3 welding transformers, developed by the Paton Electric Welding Institute, are designed for three-phase electric slag welding. The ТШС-1000-3 may operate in conjunction with the A-372P welding apparatus and some other units. The ТШС-3000-3 supplies power for the A-372P when it uses heavy-gauge plate electrodes, the A-480 apparatus and some other types. Both the primaries and secondaries of the transformers are tapped to facilitate

welding voltage regulation. The transformers have three-pole contactors for on-load tap-changing in the primaries. In this way, either variations in the mains voltage can be compensated with any desired accuracy or the welding voltage can be changed at will.

As an alternative, this may be done by means of a controller. The institute has developed a Type A-423 controller which was successfully employed in welding girth seams at the Novo-Kramatorsk Engineering Works.

Fig. 168 gives a general view of the TIIIC-1000-3 transformer. The TIIIC-3000-3 differs in size and winding connections.

For the technical data on the TIIIC-1000-3 and TIIIC-3000-3 transformers see Table 33.

Table 33

Basic parameters	TIIIC-1000-3	TIIIC-3000-3
Continuous kva rating	160 kva	450 kva
Number of phases	3	3
Winding connection	delta/star	delta/star
Continuous welding current	900 a	3,000 a
Rated primary voltage	380 v	380 v
Cooling	forced, air	forced, water

In the TIIIC-1000-3, the secondary voltage can be varied over the range indicated in Table 34.

The primary is tapped at the 61st, 58th and 55th turns, and the taps may be changed only when the mains voltage has to be stepped down.

Table 34

Contactor No	Primary turns brought in by contactors	Secondary voltage for		
		W_2=7	W_2=8	W_2=9
K1	70	38	43.4	48.9
K2	67	39.7	45.3	51.0
K3	64	41.6	47.5	53.5
K4	61	—	—	—
K5	58	—	—	—
K6	55	—	—	—

The taps can be changed by means of six three-pole contactors built into the transformer housing.

The contactors are controlled by means of six pilot relays *PR* with operating coils for 36 v. The relays are energised by means of

a selector switch *SS* mounted either on the welding unit or externally to it (Fig. 169). The relays *PR* draw their power from a step-down transformer *DT*.

The welding voltage may also be adjusted by changing the welding wires on the low-voltage terminal board, with the transformer disconnected from the mains. When the welding voltage is adjusted by means of the tap-changing switch on the control panel of the welding apparatus, the transformer may be left connected to the mains.

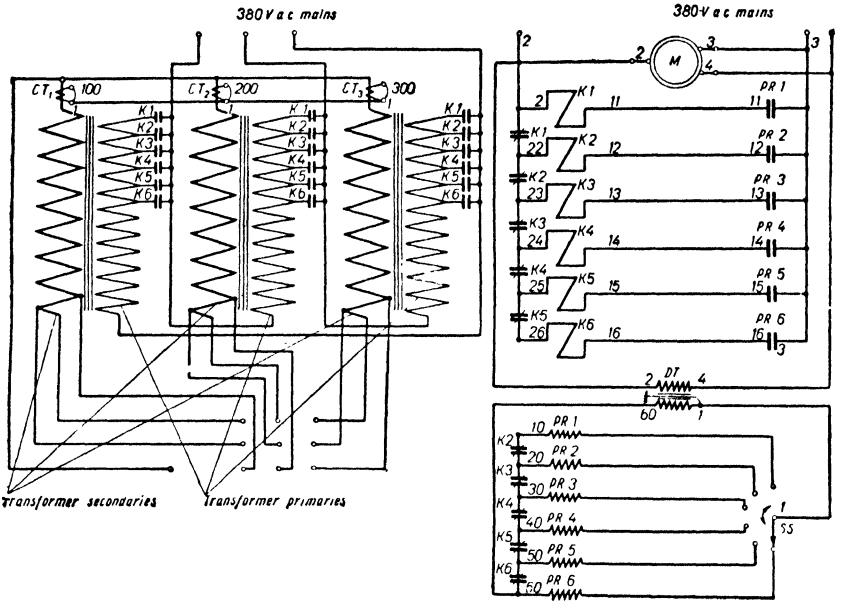

Fig. 169. Schematic diagram of the ТШС-1000-3 welding transformer.

In the ТШС-3000-3 transformer, the secondary voltage can be adjusted over the range shown in Table 35, while the primary voltage remains at the rated value.

Contactors *K3* and *K4* may be resorted to only when stepping down the mains voltage. The voltage values indicated in the table can be obtained by repositioning the respective fly-leads.

The taps on the primary can be changed either by repositioning the fly-lead in the three arrangements as shown in Table 35 or by means of four three-pole contactors *K* built into the transformer housing. The contactors are controlled by four pilot relays *PR* with operating coils for 36 v. The power for the relays is drawn from a step-down transformer *DT*. The welding current is read from the ammeters connected to the current transformers CT_1, CT_2 and CT_3.

Table 35

Contactor	Primary turns brought in by contactors	Secondary voltage for W_2=1	W_2=2	W_2=3	W_2=4
		1st position of fly-leads on tap-changing panel			
K1	48	7.9	15.8	23.7	31.6
K2	44	8.65	17.3	25.9	34.6
K3	41	9.27	18.55	28.8	37.1
K4	38	10	20	30	40
		2nd position of fly-leads on tap-changing panel			
K1	41	9.27	18.55	28.8	37.1
K2	37	10.27	20.55	30.8	41.1
K3	34	11.17	22.35	33.5	44.6
K4	31	12.25	24.5	37.7	49
		3rd position of fly-leads on tap-changing panel			
K1	34	11.17	22.35	33.5	44.6
K2	30	12.65	25.3	38.0	50.6
K3	27	14.2	28.4	42.6	56.8
K4	24	15.8	31.6	46.5	63.3

The desired relay is energised by the selector switch mounted on the welding unit or externally to it (Fig. 170).

Welding voltage regulation either by tap changing on the secondary or by repositioning the fly-leads on the primary may be effect-

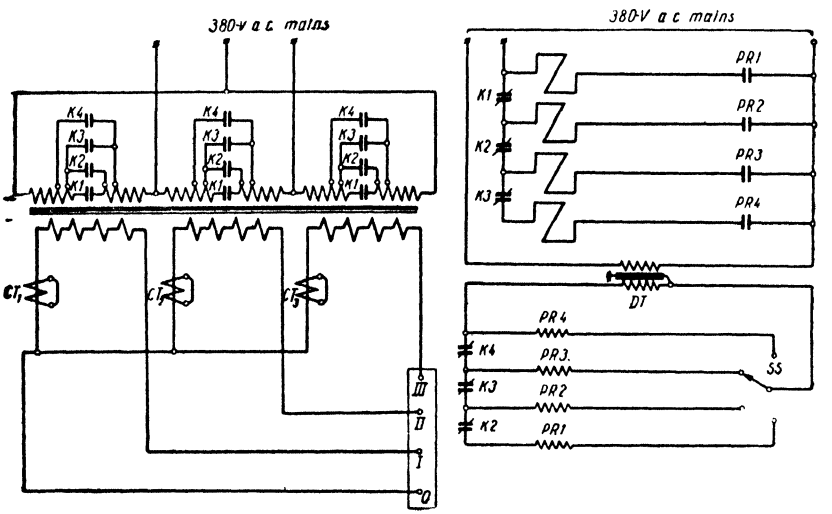

Fig. 170. Schematic diagram of the ТШС-3000-3 welding transformer.

ed only when the transformer is disconnected from the line. On the other hand, when the tap-changing switch on the operator's desk is employed, this may be done during welding.

When the welding current exceeds 1,500 a, the secondary turns have to be cooled with water.

The uses for the ТШС-1000-3 and ТШС-3000-3 transformers include single-, two- and three-phase electric slag welding and hard-facing, resistance slag welding, casting, ingot reheating, and shape casting.

If ТШС-1000-3 transformers are not available, use may be made of transformers designed for submerged arc welding, like the ТСД-1000-3 or its equivalents. Three-phase power for welding may be drawn from three ТСД-1000-3 transformers.

2. Automatic Control of Electric Slag Welding

To obtain the best results from electric slag welding it is essential that the welding conditions be properly chosen and maintained constant in welding. In some relatively rare cases, the welding conditions have to be readjusted in the process in a desired pattern.

The normal course of welding may be upset by various disturbing influences. The disturbing influences may be classed by place of origin as follows:

(1) Disturbances due to changes in the groove conditions, poor edge preparation, poor fit-up, or distortions;

(2) Disturbances originating in the welding zone due to changes in the physical and chemical properties of the slag and electrode wire and due to electromagnetic phenomena;

(3) Disturbances due to changes in the load torque on the shafts of the electrode feed and traction motors, changes in the dry length of the electrodes, unreliable contact in the current-carrying electrode guides, changes in the parameters of control circuit components, etc.;

(4) Disturbances due to changes in the mains voltage and the parameters of the welding circuit.

The above disturbances may vary with time, be periodic or aperiodic, sustained or transient.

It stands to reason that if the disturbances are of sustained and fundamental nature, the desired quality of electric slag welds will be difficult, if not impossible, to attain. Incidentally, this also applies to submerged arc welds made in the downhand position.

In control systems for electric slag welding, the main emphasis should be placed on their ability to minimise the disturbances listed under (1) and (4). For it is these disturbances above all that affect the values of the welding voltage and current, as well as the depth of the metal and slag pools.

Electric slag welding control systems may be classed by the nature and number of either controlled variables (welding voltage and current, depth of the metal and slag pool) or manipulated variables (rate of electrode feed, speed of the welding unit along the joint, no-load voltage, or impedance of the welding circuit).

The welding zone in the electric slag process has the ability of self-regulation (or self-recovery). Electric slag welding proceeds fairly steadily at a constant electrode speed. Therefore, the first group will encompass systems in which the self-regulation of the welding zone depends on changes in the rate of melting of the electrode wire which, in turn, are caused by changes in the welding current and voltage. Of course, such systems can only respond satisfactorily to short-duration and subsident disturbances.

Another group will include systems in which the welding voltage or current is controlled by manipulating any of the four variables listed.

A third group will cover systems controlling the level of the metal pool by varying either the speed of travel of the welding machine or the electrode speed. The level of the slag pool is checked against the top of the moulding shoe or of any other moulding device employed, and the amount of slag is controlled by metering out the quantity of flux added.

A fourth group will embrace systems which control the level of the metal pool by varying any two of the four manipulated variables, which may be, say, the electrode speed and the impedance of the welding circuit.

A fifth group will include systems which control the level of the metal pool and the welding voltage or current by separate manipulation of two manipulated variables. The level of the pool may be controlled by manipulating, say, the speed of travel of the welding unit, and the welding voltage, by manipulating the open-circuit voltage of the power source.

Obviously, the systems classified above will respond differently to the disturbances likely to develop in welding. Hence, intolerable steady-state and transient errors may occur.

Our analysis of control systems will be mainly based on the steady-state performance of power sources and controllers.

In the case of disturbances in the welding zone, the welding current and voltage are unambiguously related by the equation describing the rated external characteristic of the power source. With a transformer having a straight-line volt-ampere characteristic, the voltage remains practically unchanged, while the current changes (points A and B on curve *1*, Fig. 171). In the case of a drooping external characteristic, the current is reduced as the voltage rises, and vice versa (points C and D on curve *2*). In all the groups, the control systems minimise these disturbances and restore welding conditions (point N) with the desired accuracy.

Fig. 172 shows how control systems minimise disturbances in the power source that affect its external characteristics (curves *1* and *4*). Variations in the mains voltage displace the external characteristics (curves *2*, *3* and *5*, *6*). Manipulation of the electrode speed or of the travel speed of the welding unit alone will not restore the desired welding conditions (point *N*), when voltage or current is controlled automatically.

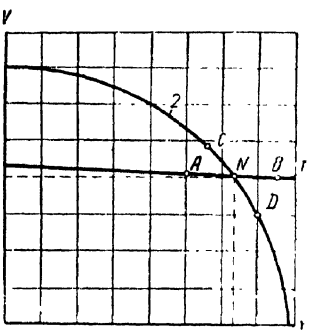

Fig. 171. Volt-ampere characteristics of welding sources.

The new welding conditions will be characterised by the coordinates of the points in the shaded areas in Fig. 172. The welding conditions attainable by self-recovery systems (the first group) are described by points *A* and *B* at which curves *2*, *3* and *5*, *6* intersect curve *7*. According to studies at the Electric Welding Institute, curves *7* in electric slag welding are identical with the steady-state curves for a welding head in downhand submerged arc welding. Thus, the self-recovery systems employed in electric slag welding are similar to automatic current control systems (the second group), which is also true of electric arc welding.

Therefore, it is not advisable to employ automatic welding current control systems. The reason is that they do not allow the mani-

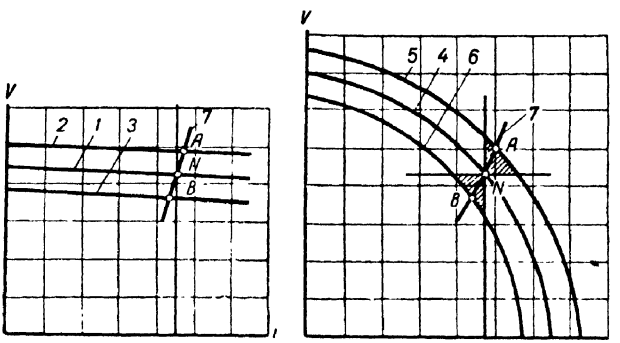

Fig. 172. Volt-ampere characteristics with varying mains voltage.

pulated variables to be matched so as to respond to different disturbances (Figs. 171 and 172) and they show a poorer transient performance. For the same reason, it is not advisable to employ automatic control systems which vary the welding voltage and current.

Disturbances in the power source can be satisfactorily minimised by automatic welding voltage control systems through manipulation of the welding transformer voltage. At the same time, the self-recovery of the welding zone is utilised, and the electrode wire is fed into the slag pool at a constant and independent rate.

By far the best way to control the level of the metal pool is to vary the travel speed of the welding machine along the joint.

To sum up, the optimal performance seems to be offered by a system in the fifth group, consisting of two separate controllers, one for the pool level and the other for the welding voltage. Let us examine the controllers.

Controlling the level of the weld pool. In electric slag welding, the cross-sectional area of the deposited metal is a function of the joint gap and the inner contour of the moulding shoes or other devices employed. If the electrode speed and the speed of travel of the welding unit remain constant, changes in the joint gap will inevitably change the level of both the metal and slag pool.

The level of the slag pool relative to the moulding shoes or other moulding devices can be easily measured and maintained constant by metering out flux feed. If the depth of the slag pool is to remain unchanged, the level of the metal pool should be maintained constant relative to the moulding facility.

The level of the metal pool relative to the moulding shoe will remain constant if

$$F_d v_w = F_e v_e,$$

where F_d is the cross-sectional area of the deposited metal, v_w is the welding speed (or the speed of travel of the welding unit), F_e is the cross-sectional area of the electrode, and v_e is the rate of electrode feed, or electrode speed.

The level of the pool may be controlled by proportionally varying the electrode speed v_e, or the welding speed v_w, or the two speeds simultaneously.

When pronounced disturbances are due to the groove conditions, the pool can be maintained at the desired level by sharply changing the electrode speed. This can be easily performed, provided power is drawn from a constant-voltage power source. Appreciable variations in the welding current due to changes in the electrode speed, however, may result in great, sometimes prohibitively great, changes in the depth of the metal pool and in crystallisation cracks. Therefore, control of the weld pool level through manipulation of the electrode speed is not an attractive proposition.

Control of the pool level through manipulation of the welding speed seems more advantageous. The salient feature of this system is that it controls a non-electric quantity—the level of the molten metal beneath the moulding shoe. Therefore, the sensing element of

the system has both to measure the level of the pool and to convert the result obtained into an electric quantity.

The level of the molten metal under the moulding shoe may be indicated either by a direct or an indirect method. In the first case, it is gauged either by differential thermocouples (Fig. 173*a*) which measure the temperature difference in the wall of the moulding shoe fitting to the weld, or by a radioactive level gauge (Fig. 173*b*), or by an electric prod (Fig. 173*c*).

By the indirect method, the level of the metal pool is determined on the basis of the welding voltage and current, which in turn depend on the dry length of the electrode. However, the many experiments made at the Electric Welding Institute and field data on electric slag welding seem to show that there is no clear-cut and unambig-

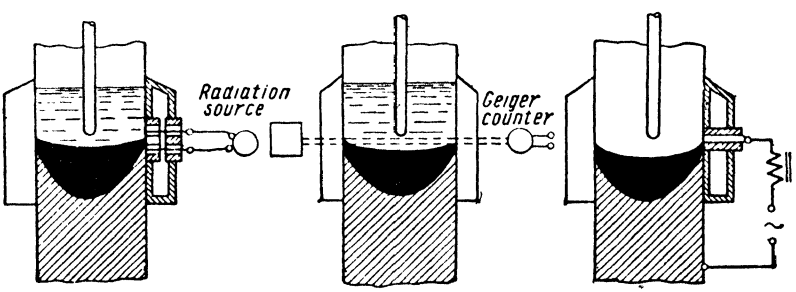

Fig. 173. Level gauging in the metal pool.

uous relation between welding voltage and current, on the one hand, and the level of the weld pool, on the other. This is why the indirect method of level measurement cannot be recommended.

As a matter of fact, the method involving differential thermocouples also has fundamental weaknesses. The difference between the two thermal emfs in a differential circuit is negligible in magnitude and calls, consequently, for amplifiers with an extremely high gain factor. Furthermore, results are to an extent dependent on the flow rate of cooling water in the moulding shoe, and on the thickness of the slag crust under the shoe. This type of controller is insufficiently reliable, as the thermocouples built into the moulding shoe may e. s-ily be damaged. For these reasons, the differential thermocouple method cannot be recommended for wide use.

A radioactive level gauge simplifies level measurements appreciably, as there is no direct contact between the gauge and the slag and metal pool. For its operation, a radioactive level gauge depends on the difference in the absorption of gamma-rays by molten slag and metal. Fig. 174 shows a schematic diagram of the automatic controller built around a radioactive level gauge that was developed by the

Electric Welding Institute. The radiation from Co^{60} placed in a lead container *K* in front of the moulding block passes through the horizontal slit in the container to a Geiger counter *GC* enclosed in a case, so as to protect it from the heat. The lead container has walls 30 mm thick, which provide sufficient biological shielding for the operator to work safely within 25 to 30 cm of the cobalt source.

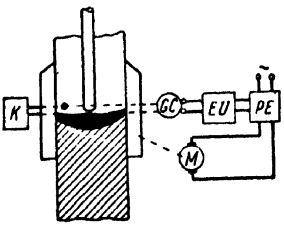

Fig. 174. Schematic diagram of weld pool-level control employing radioactive source.

The pulses from the Geiger counter are amplified and averaged in an electronic unit *EU* (Fig. 174). The output of the electronic unit is fed into a power element *PE* which varies the welding speed by means of a motor *M*. Naturally, the amount of radiation has to be increased with the thickness of the workpiece.

The radioactive controller has proved efficient on thicknesses up to 120 mm, maintaining the level of the metal pool accurate to within ±2 mm. This controller, however, is rather complicated and calls for special measures to secure the safety of personnel. This is why automatic pool-level controllers based on radioactive isotopes have not found any practical use.

The simplest and most reliable way of gauging the level of the metal pool is with an electric prod. In the simplest case, a vertical water-cooled prod is dipped into the slag pool. Power for the prod is drawn from a separate source via a series resistor. The voltage across the slag gap between the prod and the metal pool is directly proportional to the gap and becomes zero when the prod touches the molten metal. Experience has shown that the elementary prod just described is too sensitive to changes in the flow rate of cooling water and is therefore insufficiently reliable.

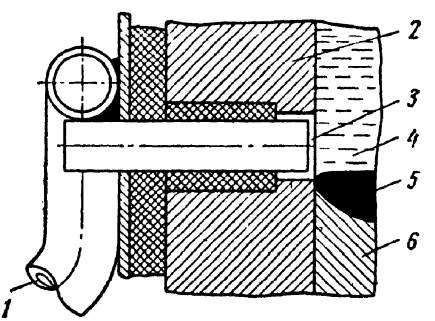

Fig. 175. Horizontal copper prod:
1—cooling water; *2*—moulding shoe; *3*—copper prod; *4*—slag pool; *5*—metal pool; *6*—weld

More reliable results can be obtained with a horizontal prod built into the moulding shoe, provided precautions are taken not to let slag or molten metal cover the face of the prod, as otherwise the gap between the prod face and the metal pool may be bridged. Nor should the prod end jut out of the shoe into which it is built. As has been found through a large number of experiments, best results are obtained with a copper prod (Fig. 175).

Fig. 176 shows the circuitry of the pool-level controller employed by the Electric Welding Institute in A-372P units when welding straight joints with electrode wire.

The prod draws its power from the welding transformer secondary via an air-gap choke *Ch*. The current at which slag will not stick to the prod can be set by adjusting the air gap when the prod is short-circuited.

The circuit from the prod is completed through the lamp *L*, the step-up transformer *UT*, a rectifier *SR2* to the resistor R_2 of the pi-network measuring unit. The other resistance of the measuring unit, the potentiometer R_1, draws power from an external a. c. source via the rectifier *SR1*. Brought into the ratio arm *a-b* in series with the detector *D* is the control winding *CW* of the rotary amplifier *RA* which powers the vertical travel motor *VTM* of the welding apparatus.

When the prod is at zero potential, the current traversing the control winding *CW* of the rotary amplifier will be controlled by the position of the slide contact on the potentiometer R_1. In this position, the rotary amplifier *RA* is excited to the nominal voltage, and the weld proceeds upwards at a rate exceeding that of the metal pool.

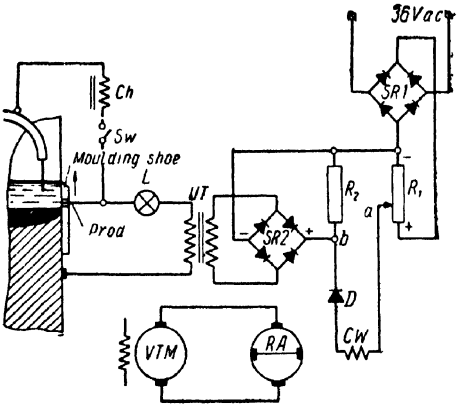

Fig. 176. Electric diagram of metal-pool level control in A-372P welding apparatus.

As a result, the prod breaks away from the metal pool, a potential is built up at it, and the rate of vertical travel of the apparatus is reduced. The detector *D* (a Type ДГ-Ц6 germanium diode) cuts off the reverse current in the control winding *CW* and prevents the traction motor of the welding unit from being reversed.

When starting the weld, the voltage between the prod and the workpiece is equal to that of the welding transformer. As the voltage ratio of the transformer *UT* is 1/10, its secondary voltage might be as high as 400 v or even more. To avoid that, transformer *UT* is so designed that its magnetic circuit reaches saturation when the primary voltage is 7 or 8 v. The excess voltage is swamped across the non-linear resistance of the lamp *L*. This lamp also serves to indicate controller operation, as its brightness shows the position of the prod relative to the metal pool.

Experience has shown that the controller operates steadily under any welding conditions. When necessary, it permits manual opera-

tion. In that case, the circuit to the prod is opened by the switch SW, while the desired speed of travel is set by means of the potentiometer R_1. The deviation from the set level does not exceed ± 2 mm at the top welding speed, which meets the requirements of sound welding practice.

Automatic control of the pool level on slag-welded circumferential seams. As the surface of the prod face lies in one plane with the surface of the moulding groove of the shoe, the automatic controller just described may be applied to slag-welded circumferential seams as well. In the case of straight seams, the welding unit is moved vertically by a 0.5-0.7 kw motor, which is powered directly by a rotary amplifier. In the case of circumferential seams, the welding apparatus

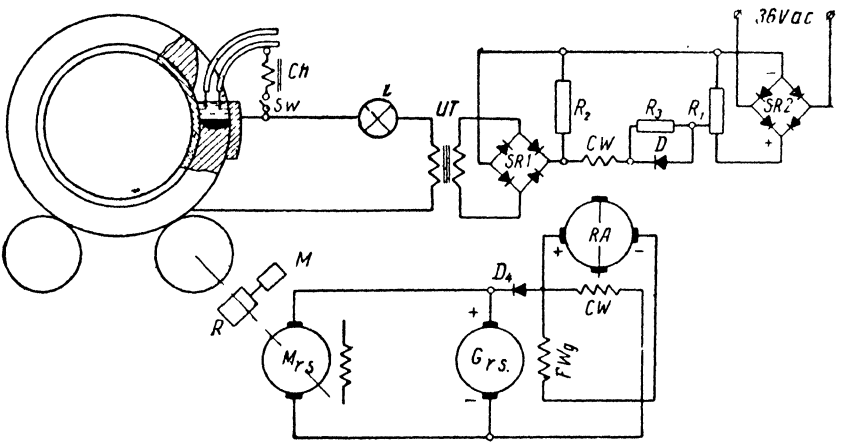

Fig. 177. Schematic diagram of weld-pool level control on circumferential seams.

remains stationary, while the workpiece is rotated by an electric motor of a higher power rating (5 to 10 kw) in order to take care of the idling speed.

The Electric Welding Institute has developed a standard circuitry for a two-motor electric slag welding outfit for circumferential seams. The idling speed is provided by a relatively powerful induction motor driving the rolls of the stand via the idling-speed reduction gear.

Working speeds are provided by a 2-2.5 kw d. c. motor coupled to the stand rolls via the idling-speed reduction gear and an additional reduction gear R. The additional reduction gear can be engaged and disengaged by means of a claw clutch operated by an electromagnet M.

A schematic diagram of automatic pool-level control for circumferential seams is shown in Fig. 177, while its operation is clear from Fig. 176. In Fig. 177, the detector D is shunted by a resistor R_3 so

as to eliminate the residual magnetism of the generator $G_{r.s}$ and stop dead the roller stand motor $M_{r.s}$. The rotary amplifier RA energises the field winding FW of the roller stand generator $G_{r.s}$. The control winding CW of the rotary amplifier is connected across the armature of the generator $G_{r.s}$. via a detector D_4 and prevents the voltage polarity of the generator from changing.

Naturally, the rotary amplifier in Figs. 176 and 177 may be replaced by some other components, such as magnetic amplifiers.

The pool-level controllers illustrated in Figs. 176 and 177 have proved efficient in sustained operation under shop conditions.

Automatic control of the slag pool level relative to the moulding shoe is a much easier task. In the simplest case, this purpose can be served by a prod which will complete the circuit as soon as it comes in contact with the surface of the slag pool. The output pulse will actuate the electromagnetic gate valve of the batch-weigh scale feeding flux into the slag pool. This type of controller operates well, provided the batch-weigh scale and its gate valve are of a reliable construction. Experience has shown, however, that in most cases the slag-pool level controller may be dispensed with, as the small amount of flux consumed in electric slag welding can be conveniently fed manually.

Controlling the pool level in electric slag welding with plate electrodes. Plate electrodes may be employed in conjunction with suitably reset units A-372P and A-480, etc. In these units, the plate electrodes are fed downwards into the slag pool as they melt, and no other motions are employed.

The sides of the weld are usually moulded by either copper or steel water-cooled strips which are removed after welding.

In welding with plate electrodes, the function of an automatic control system is to maintain the welding voltage and current constant or change them in a predetermined manner and to keep the depth of the slag pool unchanged.

The absence of moulding shoes and the upward vertical travel of the welding unit complicate systems with which the depth of the slag pool may be gauged.

Radioactive level gauges would give reliable readings. Welding with plate electrodes, however, is usually applied to heavy sections (with thicknesses up to 1,000 mm), and the amount of radiation necessary in such cases would be dangerous to personnel. That is why automatic pool-level controllers based on radioactive level gauges may not be applied as yet to welding with plate electrodes.

The simplest way of gauging the depth of the slag pool is by means of a dipstick submerged into the slag pool at regular intervals. The dipstick may be fusible or non-fusible. The initial pulse in the circuit will be produced when the dipstick touches the top surface of the slag pool, and another pulse will be generated when it comes in contact with the metal pool. The time between the two pulses

will give a measure of the depth of the slag pool. When using a fusible dipstick, the size and rate of descent should be so chosen as to reduce the melting of the dipstick, as it goes down, to the minimum. Of course, the circuit may incorporate a facility which would correct the indication for the melting of the dipstick. When using a non-fusible dipstick, it should be water-cooled. Utmost care should be taken that the slag does not adhere to the stick face and stick is safe to handle.

In the scheme presented below, the result may be easily expressed in volts. When the tip of the dipstick comes in contact with the surface of the slag pool, the quick-action relay *R1* operates to close an *r-C* network (Fig. 178). The network is opened when another relay *R2* operates in response to the dipstick touching the molten metal. If the time constant of the network is chosen properly ($T=rC$), the voltage across the capacitance will be proportional to the holding time and the depth of the slag pool. This voltage is compared with the reference voltage, the difference is amplified and fed into the final control element—in this case the gate valve of the batch-weigh scale feeding flux to the slag pool.

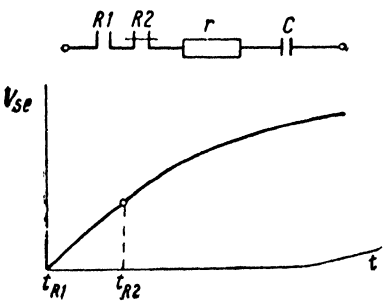

Fig. 178. R-C circuit for measuring the depth of the slag pool.

The value of the welding current may be easily maintained constant by varying the electrode feed rate. An automatic controller for this application poses no particular difficulties. In fact, it is similar to the arc current controller employed in welding heads. The welding voltage may be maintained constant or changed in a predetermined manner by means of the automatic controller discussed elsewhere.

Controlling the depth of the slag pool in hard-facing by the electric slag process. Large flat surfaces and bodies of revolution are usually hard-faced with electrodes made in the form of wire. Therefore, the depth of the slag pool, as well as the welding current and voltage, are controlled in much the same manner as in welding straight and circular joints with wire electrodes.

The most efficient way of depositing a large quantity of hard-facing metal on small areas is by means of large-size electrodes, and the hard-facing conditions should be controlled as they are in welding with electrodes of this type. The side surface of the deposited metal is usually moulded by water-cooled copper chills. Hard-facing may be stopped by an electrical prod mounted on the inside of the chill at the desired height. This technique, for example, is employed in hard-facing tong bits for ingot cranes by the A-528 welding unit developed by the Electric Welding Institute.

Controlling the conditions of resistance slag welding. The purpose of resistance slag welding is best served by constant-voltage power sources. The desired welding current is maintained by regulating the approach time of the top electrode or any other part. In many cases, satisfactory results may be obtained by feeding the top electrode manually. The automatic welding current controller does not practically differ from the one employed in electric slag welding with large-size electrodes.

In resistance slag welding, there is no need to control the depth of the slag pool, as the weld time is relatively short (1 to 6 minutes), but it is a good plan to incorporate a timer in the circuitry of the resistance slag welding unit.

Automatic voltage regulation in electric slag welding and hard-facing. The function of an automatic voltage regulator is to maintain the welding voltage constant or to vary it in a predetermined manner. Electric slag welding and hard-facing usually employ constant-voltage power sources. This precludes any possibility of regulating the welding voltage by varying the inductive reactance of the welding circuit. Instead, the welding voltage may be maintained constant with the desired accuracy by changing taps on the sectionalised primary of the welding transformer.

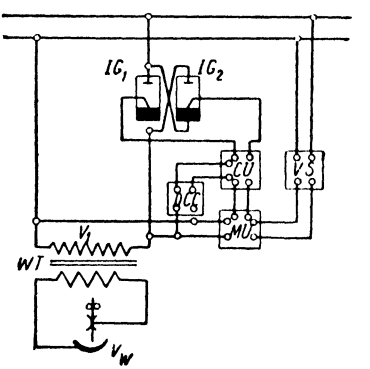

Fig. 179. Diagram of automatic voltage control for electric slag welding.

As was mentioned in connection with the TIIIC-1000-3 and the TIIIC-3000-3 transformers, tap changing can be effected either manually by means of a switch mounted on the operator's desk, or by a system of sensitive voltage and pilot relays operating power contactors. In the second case, the welding voltage is regulated in steps by a relay-contactor system.

A continuous voltage regulation system is better. Fig. 179 shows the regulator schematically. The welding transformer *WT* is brought into the line by means of two ignitrons IG_1 and IG_2 connected in reverse parallel. As distinct from submerged arc welding, this type of connection is tolerable, as interruptions in the welding current flow during each half-cycle do not impair the stability of welding.

The measuring unit *MU* compares the reference voltage from the voltage stabiliser *VS* with the controlled voltage V_1 from the primary of the welding transformer *WT*. The result of this comparison, representing an error, is converted by the controller unit *CU* into pulses which are used to control the grid circuits of the trigger thyratrons

incorporated in the ignitor control circuits of the ignitrons. At the same time, the controller unit *CU* receives a voltage from the d-c component compensator *DCC*, which is proportional to the d-c component of the voltage across the welding transformer primary. The d-c component compensator is essential, as the d-c component due to differences in the characteristics of the thyratrons and ignitrons may result in a sharp increase in the no-load current of the welding transformer, which is intolerable under conditions of sustained operation.

The system exhausts its "control margin" and loses control of the voltage while the arc in the ignitrons is still maintained. Besides, the system loses control each half-cycle after the arc in the ignitrons is initiated and until the primary current of the welding transformer goes through zero. This, however, is of minor practical consequence, as the melting of the parent and electrode metal is a process of high inertia.

In most cases, it is a good policy to employ an ignitron contactor to compensate variations in the mains voltage. Therefore, a welding transformer ought to have sectionalised windings, and be tapped so as to take into account the likely mains voltage variations and the welding voltage desired. If the r.m.s. welding voltage is to remain unchanged while the mains voltage fluctuates anywhere between 0.85 and 1.05 of the rated value, the firing angle of the ignitrons should be increased from 30° to 77°. If the welding voltage is to be programme-controlled, the reference constant voltage V_0 applied to the input of the measuring unit *MU* should be replaced by a voltage varying in a predetermined manner.

The ignitron contactor may well be employed when the power for electric slag welding is drawn from a three-phase source. A three-phase ignitron contactor is a combination of three identical single-phase ignitron contactors. This "unitised" design offers additional advantages in service.

In fact, the ignitron contactor may be employed on single-, two- and three-phase power sources. The welding voltage is maintained constant with an accuracy of 1.5 to 3 per cent against mains voltage variations as large as 25 per cent. The contactor has a high speed of response and is capable of handling any transient changes in the supply voltage. Welding may be performed with any voltage across the electrodes and with any sequence of voltage regulation.

It is advantageous to have four limbs in the magnetic circuit of the transformer employed in three-phase electric slag welding in conjunction with an ignitron contactor. To this end, a magnetic shunt may be made for the ТШС-1000-3 transformer.

Chapter VIII

WELDING PROCEDURES FOR CARBON AND ALLOY STRUCTURAL STEELS

1. Killed Carbon Steels

Killed open-hearth steels, which are widely used in heavy engineering and essential structures, contain less impurities and possess better weldability, as compared with rimmed steels.

In most cases killed open-hearth carbon steels are obtainable in castings and forgings, standard-quality hot-finished steel or high-grade hot-finished structural commercial carbon steels, etc. These steels differ mainly in carbon content and less in sulphur and phosphorus content.

As the carbon content of a steel increases, its strength also increases and the weld metal has also to be stronger, if a full-strength weld is to be obtained. A higher carbon content complicates welding procedures, as the danger of cracking increases. From this angle, carbon steels may be classified into three groups:

1. Easy-to-weld steels containing up to 0.25 per cent of carbon;
2. Difficult-to-weld steels containing anywhere from 0.25 to 0.5 per cent of carbon, and
3. Steels containing more than 0.5 per cent of carbon. It should be noted, however, that such steels have not been used yet in products welded by the electric slag process, although they can be successfully hard-faced by this method.

Though in electric slag welding the parent metal is heated under more favourable conditions than in multipass arc welding, appreciable stresses are set up in the welded joint, which may aggravate the susceptibility of the weld metal to hot cracking and even lead to the brittle failure of the parent metal. This tendency may somewhat be moderated by preheating and concurrent heating. In the case of circumferential welds made in steels containing 0.25 to 0.3 per cent C and with a wall thickness of 200 mm, the weld metal tends to develop cracks immediately before the joint is closed. However, no cracks were found when the electrode speed had been reduced (or, which is the same, the aspect ratio of the weld had been increased)

and the beginning of the joint had been reheated prior to closing. Indeed, there were no cracks in circumferential welds made in steels as thick as 350 mm and containing up to 0.4 per cent C.

It has been noted elsewhere that the susceptibility of welded joints to crystallisation cracks increases with the electrode speed. As has been found in experiments and demonstrated more than once in commercial practice, electric slag welding has a limiting (critical) electrode speed at which no crystallisation cracks develop in the weld metal.

An increase in the joint gap may, as has been noted, raise the critical electrode speed. The welding voltage has a similar, though less pronounced, effect.

There is little, if any, difference between the critical electrode speeds in welding with one or with two electrodes.

An increase in carbon content in the parent metal, on the other hand, reduces the critical electrode speed.

The choice of a particular welding procedure is governed by the following considerations:

(1) Electrode wire and flux should be cheap and accessible for large-scale welding.

(2) The production rate should be as high as possible.

(3) Auxiliary operations, including preheating and concurrent heating, should be kept to a minimum.

(4) Post-welding heat treatment should be avoided or simplified as far as possible.

As will be recalled, the chemical analysis of the weld metal is determined by the proportion of the electrode and parent metal in it and by the nature of exchange reactions between the metal and the slag. With the low-carbon electrode wire and fluxes currently employed, the carbon content in the weld metal depends almost exclusively on the proportion of the electrode and parent metal. Therefore, with other conditions being equal, an increase in the carbon content of the parent metal results in an increase in its content in the weld metal. As a result, the strength of the weld is enhanced, but cracks are more likely to develop.

There are two ways to obtain full-strength welded joints: (a) by increasing the carbon content of the weld metal and (b) by alloying the weld metal with silicon and manganese while keeping the carbon content relatively low. In the first case, special measures have to be taken to prevent cracking during solidification. This will be discussed in detail later.

In welding steels 15, 15Л, and Ст. 2 with the lowest carbon content, full-strength welded joints may be obtained if Grade Св-08 or Grade Св-08А electrode wire is employed.

The electrode wire recommended for welding Grade Ст. 3 low-carbon steel in conjunction with ФЦ-7 or АН-8 flux is (a) Grade Св-08ГА for welding with one movable electrode, and (b) Grade Св-08А,

or a combination of Grade Св-08А and Grade Св-10ГС, for welding with two electrodes.

The chemical analyses of the parent metal, Grade Св-08ГА electrode wire and the weld metal are given in Table 36, while Table 37 presents the results of mechanical tests.

Similar data for welded joints made with two electrodes, Grade Св-08А and Св-10ГС, are tabulated in Tables 38 and 39.

As the below-given tables show, the weld metal, in the case of Grade Св-08ГА electrode wire, has a high ductility but is of inferior strength compared with the parent metal. The weld metal in the

Table 36

Metal	Chemical analysis, per cent					Note
	C	Mn	Si	S	P	
Parent	0.16-0.16	0.57-0.57	0.14-0.26	0.034-0.026	0.029-0.026	Welding conditions: electrode speed 200-260 m/hr
Electrode, Grade Св-08ГА	0.09	0.99	Traces	0.021	0.030	welding current 500-600 a
Weld	0.11	0.84	0.05	0.024	0.028	welding voltage 42-44 v

Table 37

Metal	Yield point, kg sq mm	Ultimate strength, kg sq mm	Elongation, per cent $l=5D$	Reduction of area, per cent	Toughness, kgm sq cm
Parent	$\frac{19.1\text{-}25.6}{20.8}$	$\frac{39.3\text{-}50.6}{42.4}$	$\frac{18.6\text{-}30.0}{26.1}$	$\frac{53.7\text{-}61.5}{58.7}$	$\frac{9.1\text{-}20.9}{12.5}$
Weld made with two electrodes	$\frac{23.6\text{-}26.8}{24.8}$	$\frac{39.2\text{-}42.8}{40.3}$	$\frac{28.0\text{-}35.7}{31.1}$	$\frac{59.4\text{-}74.3}{68.8}$	$\frac{5.3\text{-}13.8}{11.2}$
Weld made with one electrode	$\frac{23.3\text{-}27.4}{24.8}$	$\frac{39.6\text{-}41.7}{40.6}$	$\frac{26.7\text{-}34.0}{30.4}$	$\frac{63.5\text{-}71.7}{67.1}$	—

Note: The impact toughness of the parent metal in the heat-affected zone was $\frac{7.1\text{-}14.9}{11.6}$ kgm/sq cm.

Table 38

Metal	Chemical analysis, per cent					Note
	C	Mn	Si	S	P	
Parent	0.15	0.60	0.24	0.025	0.032	Welding conditions: electrode speed, 200-260 m/hr; welding current, 500-600 a; welding voltage, 42-44 v
Electrode, Grade Св-08А	0.10	0.32	Traces	0.022	0.007	
Electrode, Grade Св 10ГС	0.10	0.94	0.85	0.021	0.020	
Weld	0.13	0.72	0.25	0.024	0.026	

Table 39

Metal	Yield point, kg sq mm	Ultimate strength, kg sq mm	Elongation, per cent	Reduction of area, per cent	Toughness, kgm sq cm
Parent	21.2	42.7	24.7	—	—
Weld	28.8-30.7 / 29.2	45.0-45.2 / 45.1	25.4-34.0 / 28.7	64.3-67.9 / 65.6	3.0-16.8 / 12.4

case of two electrodes, Grades Св-08А and Св-10ГС, is superior to the parent metal both in ductility and strength.

It should be noted that the use of two electrodes differing in chemical analysis may only be recommended for relatively light gauges, when the metal will be mixed intimately. However, the use of two electrodes of different grades poses quite a number of problems under commercial conditions. A more economical and convenient way is to develop a new and simple electrode wire with an averaged chemical analysis.

An idea of how the composition of the electrode wire affects the chemical analysis and mechanical properties of the weld metal when welding Grade 25 steel 120 mm thick with one electrode and АН-8 flux is given by Tables 40 and 41.

Table 40

Metal	Chemical analysis, per cent				
	C	Mn	Si	S	P
Parent	0.28	0.79	0.24	0.029	0.025
Electrode, Grade Св-08Г	0.09	0.92	0.04	0.031	0.034
Weld	0.14	0.80	0.07	0.023	0.019
Electrode, Grade Св-10Г2	0.09	1.64	0.03	0.021	0.019
Weld	0.15	1.18	0.07	0.021	—
Electrode, Grade Св-10ГС	0.12	1.01	0.74	0.031	0.015
Weld	0.14	1.30	0.62	0.021	0.028

Table 41

Electrode wire	Heat treatment	Tensile tests				
		Yield point, kg sq mm	Ultimate strength, kg sq mm	Elongation, per cent $l=5D$	Reduction of area, per cent	Toughness, kgm sq cm
Св-08Г	None	32.3-32.7 / 32.5	46.3-47.2 / 46.7	22.3-24.7 / 23.3	51.0-57.8 / 56.0	7 5-9 5 / 8.2
	Normalising	30.1-31.1 / 30.7	45.9-46.6 / 46.4	29.7-40.7 / 34.7	41.2-66.0 / 57 3	16.3-18.7 / 17.9
Св-10Г2	None	33.4-34.1 / 33.7	45.6-47.7 / 45.6	22.3-23.3 / 22.8	51.0-59.9 / 55.4	11 8-12.5 / 11 8
	Normalising	30.4-32.2 / 31.3	47.4-47 7 / 47.5	36.3-39.3 / 37.8	69.8-69.8 / 69.8	18 8-18.9 / 18 8
Св-10ГС	None	33 6-36.4 / 35.2	55.1-55.7 / 55.4	27.3-33.3 / 31.0	55.6-58.6 / 57.5	9.4-11.9 / 10.3
	Normalising	32.2-35.2 / 33 7	52.7-54.2 / 53.4	31.7-32.7 / 32.2	68 7-69.8 / 69.2	—
Parent metal	None	25.1-26.1 / 25.6	49.1-53.0 / 50.8	29.3-33.7 / 32.0	45.5-51.0 / 48.4	4.75-5.5 / 5.1
Parent metal, according to manufacturer's specs.	None	≥27.0	≥45.0	≥24.0	≥35.0	≥ 6.0

According to Table 41, the weld metal shows high mechanical properties both after normalising and in the "as-welded" state, and it meets the requirements of the manufacturer's specifications for the parent metal. However, only the weld made with Grade Св-10ГС wire shows a strength comparable with the actual strength of the parent metal. It should be noted that the use of Grade Св-10ГС wire may result in appreciable variations in the composition of the weld

metal along the length of a joint, due to the intensive interaction of the metal and slag in the weld pool. Besides, with an increased silicon content there is a greater likelihood of crystallisation cracks developing in the weld. Therefore, of all the wire grades listed above preference ought to be given to Grade Св-10Г2 wire when welding high carbon steels. Increased manganese content in the weld both improves its strength and its resistance to hot cracking.

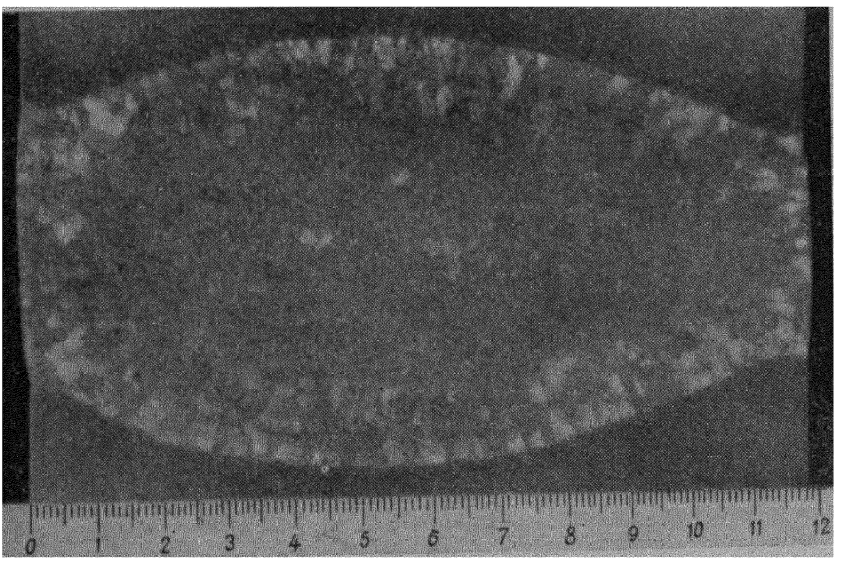

Fig 180. Macrostructure of a welded joint in steel 40.

To sum up, an increased silicon and manganese content in the weld metal makes it possible to obtain full-strength welds with as little carbon as 0.15 per cent, provided the parent steel contains relatively little carbon (up to 0.25 per cent).

However, this carbon content in the weld metal is insufficient, if full-strength welds are to be obtained in steels having anywhere from 0.3 to 0.5 per cent carbon. In such cases, as has been noted elsewhere, the weld metal may be strengthened by adding more parent metal to it. However, the feed rate of electrode wire 3 mm in diameter should be limited to 160 or 180 m/hr, or crystallisation cracks may develop.

Table 42 shows the chemical analysis of the weld metal of a butt weld made in Grade 40 steel 120 mm thick with two Grade Св-10Г2 wire electrodes. The welding conditions were as follows: electrode speed, 140 to 150 m/hr; welding current, 380 to 410 a; welding voltage, 44 to 45 v a.c.; depth of the slag pool, about 50 mm; rate

Table 42

Metal	Chemical analysis, per cent				
	C	Mn	Si	S	P
Parent	0.39-0.41	0.75	0.23-0.26	0.035-0.038	0.041
Grade Св-10Г2 wire	0.11	1.69	0.06	0.029	0.015
Weld	0.25-0.27	1.15	0.13-0.14	0.030-0.032	0.033

Table 43

Metal	Normalising	Yield point, kg sq mm	Ultimate strength, kg sq mm	Elongation, per cent $l=5D$	Reduction of area, per cent
Parent, along direction of rolling	No	35.7-36.4 / 36.1	67.9-68.9 / 68.3	23.0-25.0 / 24.1	43.5-43.5 / 43.5
	Yes	38.9-42.7 / 40.9	66.5-70.4 / 68.4	25.0-29.3 / 26.5	48.6-51.0 / 49.4
Parent, across rolling	No	35.4-37.5 / 36.6	63.3-67.6 / 65.4	7.7-18.3 / 11.6	7.5-9.8-19.0 / 12.1
	Yes	36.4-40.0 / 38.4	63.6-66.1 / 65.1	16.7-23.0 / 19.6	16.0-27.8 / 19.9
Weld, along	No	37.1-37.1 / 37.1	57.6-62.2 / 59.9	23.3-25.3 / 24.3	51.0-55.6 / 53.3
	Yes	38.2-38.8 / 38.5	63.6-66.1 / 64.7	24.3-27.3 / 25.8	41.5-51.0 / 46.2
Weld, across	No	—	—	—	—
	Yes	35.4-36.4 / 35.8	59.0-60.8 / 59.8	24.3-26.0 / 25.4	53.3-55.6 / 54.8
Grade 40 steel at + 20° C		32	57	19	45

of weaving motion, 39 m/hr; dwell of electrodes at the moulding shoes, 3 sec, and electrode spacing, 50 to 60 mm.

Fig. 180 is a macrograph of this weld in the "as-welded" state. As the parent metal in this weld accounts for not less than 50 per cent, the carbon content in the weld metal is 0.25 to 0.27 per cent.

Tables 43 and 44 present data on the mechanical properties of the weld prior to and after normalising, and comparative data on the parent metal. On the basis of tensile tests (Table 43) it may be stated that the weld metal is comparable with the parent metal both prior to and after normalising and has an appreciable edge on Grade 40 steel up to 80 mm thick.

The weld metal prior to normalising shows a toughness comparable with that of the parent metal (Table 44), while normalising sharply improves this property. On the other hand, test specimens notched along the line of fusion show an extremely low toughness prior to heat treatment, as do the specimens notched in parent metal some 2 mm from the line of fusion.

Table 44

Metal	Test temperature, deg C	Impact toughness, kgm/sq cm			
		Non-heat-treated specimen		Normalised specimen	
		notched in centre of weld	notched along line of fusion	notched in centre of weld	notched along line of fusion
Parent, along rolling	+20	3.3-4.6 / 3.9	—	4.9-6.0 / 5.4	—
	—20	—	—	3.5-4.4 / 3.9	—
Parent, across rolling	+20	1.5-1.6 / 1.5	—	2.6-3.4 / 3.0	—
	—20	—	—	1.4-1.6 / 1.5	—
Weld	+20	3.3-3.9 / 3.6	1.5-1.6 / 1.6	6.5-9.3 / 8.0	4.4-6.0 / 5.4
	—20	—	1.0-2.0 / 1.3	—	2.8-5.5 / 4.0

When normalised, welded joints display a better toughness in the fusion area, comparing favourably with that of the parent metal.

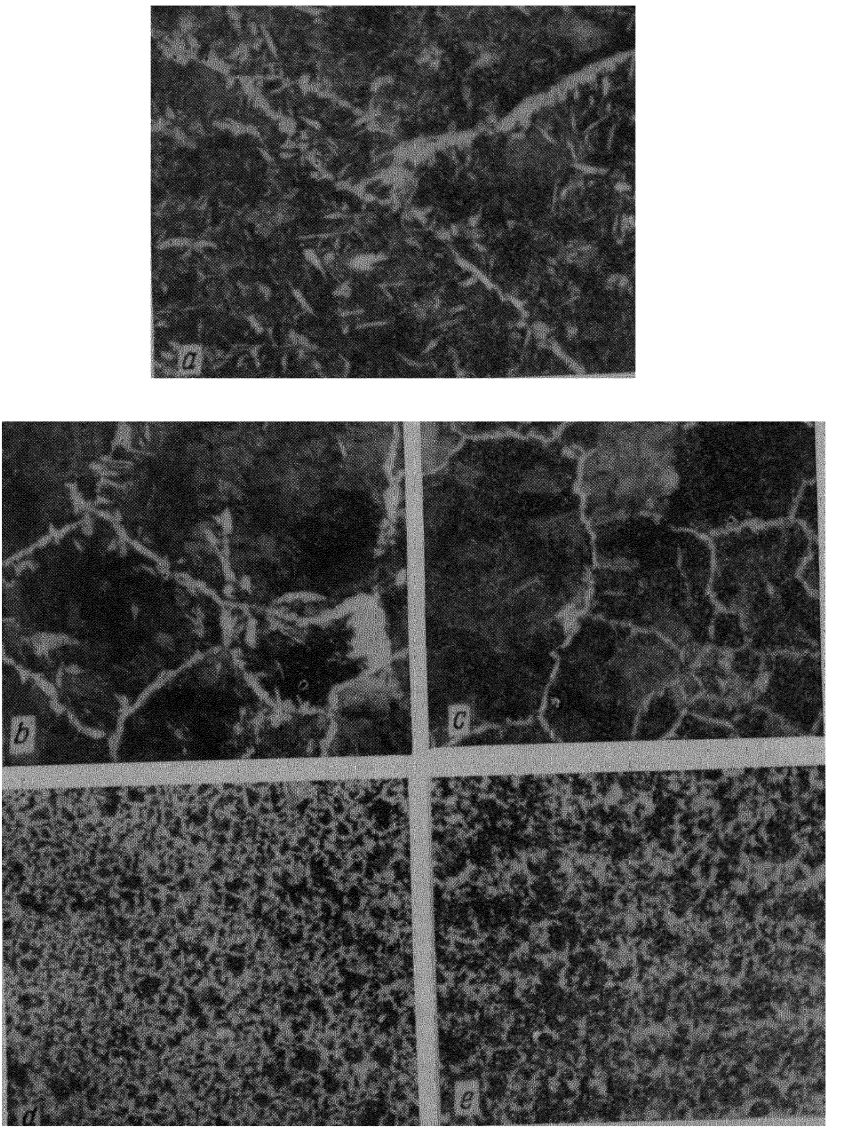

Fig. 181. Micrographs of welded joints in steel 40 without heat treatment (magnification $\times 60$):

a—weld metal; *b*—open-grain area near line of fusion; *c*—open-grain area adjoining close-grain area; *d*—close-grain area; *e*—parent metal.

In electric slag welding, the welding zone is subjected to intense heating, which tends to step up grain growth. The microstructure

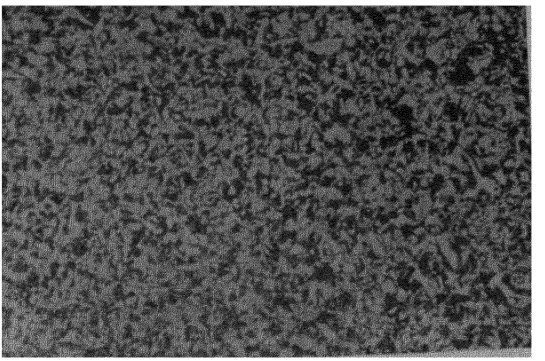

Fig. 182. Micrograph of a welded joint in Grade 40 steel after normalising (fusion area) (magnification × 60).

of various areas in the heat-affected zone is shown in Figs. 181*a* through *e*.

Normalising or annealing refines the grain in the fusion zone (Fig. 182), which partly explains the sharp increase in the toughness of the near-weld area, as compared with the original condition of the metal.

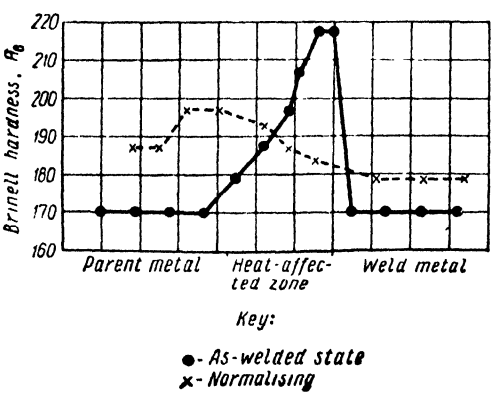

Fig. 183. Brinell hardness of welded joints before and after normalising.

The welded joint is free from hard spots (Fig. 183), but normalising somewhat reduces the hardness of the metal in the near-weld area.

Killed carbon steels may develop hair cracks in the fusion zone. Fig. 184*a* shows a typical hair crack in a welded joint made in rolled steel 25, and Fig. 184*b* the one in steel 40 upon normalising. As can be seen, increased edge heating by, say, a higher welding voltage, reduces the likelihood of separate hair cracks developing in the fusion zone, but does not eliminate them entirely. It should be added that the nature of hair cracks developing in electric slag welding has not been fully elucidated yet.

Thus, for a full-strength weld to be made in Grade 40 steel, the electrode speed has to be limited severely, i. e., low production rates have to be tolerated. At the present time, two lines of attack are taking shape, which seem to give a happy union of sound full-strength welded joints and higher production rates in electric slag welding.

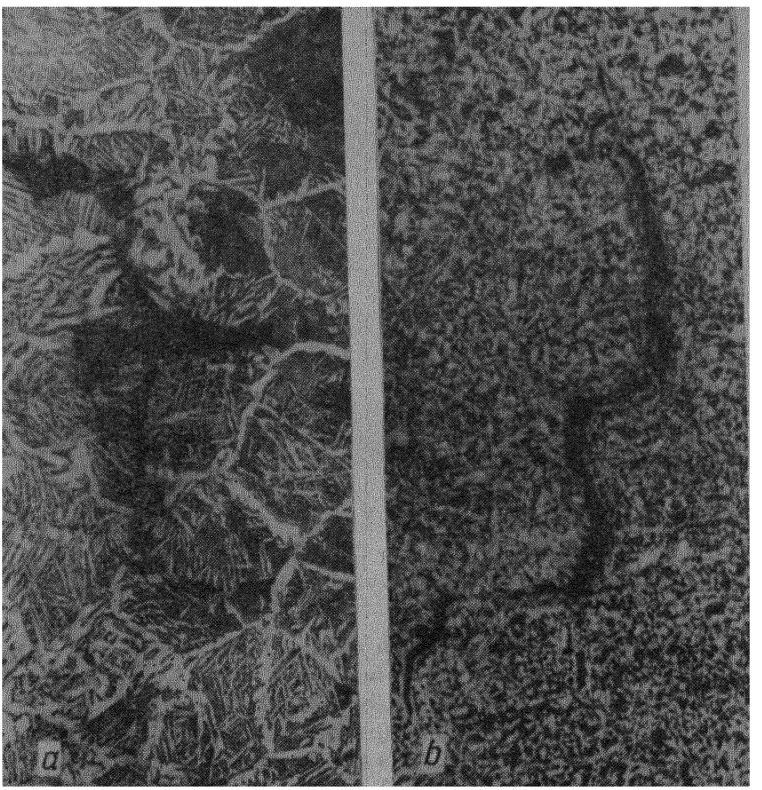

Fig. 184. Hair cracks in the fusion area of a welded joint (magnification $\times 60$):
a — steel 25 without heat treatment; *b* — steel 40 after normalising

The first involves the use of what are known as oxidised fluxes, i.e., fluxes with an increased content of FeO (up to 6 per cent as against 1 to 1.5 per cent in conventional AH-8 flux). The second makes use of fluxes based on CaF_2 and able to withdraw sulphur from the weld pool efficiently.

An oxidised slag shows better conductivity and, with other conditions being equal, seems to increase the electrode spacing, compared with Grade AH-8 flux. As a result, heat in the weld pool is less con-

centrated, the edges are better heated, and the metal pool is less overheated. The overall improvement of the thermal cycle in the weld pool goes a long way towards producing crackless welds, higher electrode speeds, and a higher carbon content in welding with plate electrodes.

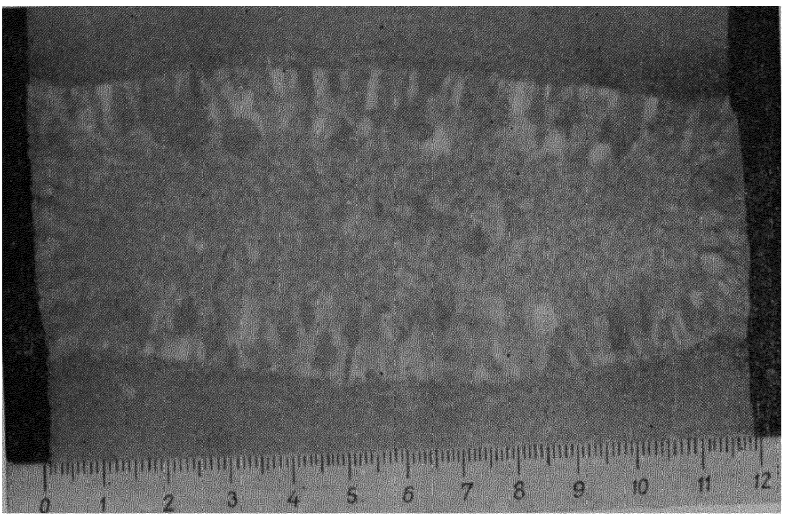

Fig. 185. Macrostructure of a welded joint in steel 40 made with two Св-10Г2 wire electrodes at a welding speed of 370 m/hr.

When welding carbon steels with oxidised AH-8 flux, the critical electrode speed is much higher. A butt weld made in Grade 40 steel 120 mm thick had no crystallisation cracks, though the electrode speed was 370 m/hr; the welding current, 580 to 620 a; and the welding voltage, 45 to 46 v. Fig. 185 is a macrograph of this weld, while the chemical analyses of the parent metal, electrode and weld metal are tabulated in Table 45.

Table 45

Metal	Chemical analysis, per cent				
	C	Mn	Si	S	P
Parent Grade	0.39-0.41	0.75	0.23-0.26	0.035-0.038	0.041
Св-10Г2 electrode wire	0.09	1.85	0.06	0.031	0.018
Weld	0.24-0.25	1.03-1.29	0.10-0.12	0.26	0.023-0.029

The properties of tensile-test coupons from the weld metal, tested both prior to and after normalising at 870° C, are shown in Table 46, while Table 47 presents the results of impact tests.

As Table 46 shows, the weld metal has a somewhat higher strength than is specified for Grade 40 steel, and a better ductility (elongation and reduction of area).

Referring to Table 47, the welded joint in the "as-welded" state has a lower toughness in the heat-affected zone, while normalising appreciably improves it.

Table 46

Heat treatment	Yield point, kg/sq mm	Ultimate strength, kg/sq mm	Elongation, per cent $l=5D$	Reduction of area, per cent
None	42.1-42.4 42.1	61.5-62.9 61.8	22.3-25.7 23.8	51.0-57.8 55.0
Normalising from 870° C	35.4-36.4 35.9	59.0-59.3 59.0	25.0-33.7 30.6	33.0-62.3 55.0

Table 47

Heat treatment	Impact toughness, kgm/sq cm			
	notched along axis of weld	notched along line of fusion	notched at 2 mm from line of fusion	notched at 5 mm from line of fusion
None	5.3-9.0 7.5	2.3-3.8 2.9	1.4-2.1 1.7	1.0-1.1 1.0
Normalising from 870° C	10.3-12.3 11.5	6.1-10.1 8.0	8.3-9.5 8.7	5.6-7.3 6.2

Areas of increased hardness in the near-weld zone were not detected either at an electrode speed of 370 m/hr or 140 to 150 m/hr; nor were hair cracks found in the fusion zone under these welding conditions.

Table 48

Metal	Chemical analysis, per cent				
	C	Mn	Si	S	P
Parent and electrode	0.39-0.41	0.75	0.24	0.037	0.041
Weld	0.41	0.72	0.20	0.024	0.035

When welding steel 40 with a plate electrode of the same steel grade and oxidised AH-8 flux, the weld metal had practically the same composition as the parent metal (Table 48).

Table 49

Condition of welded joint	Mechanical properties					
	Yield point, kg/sq mm	Ultimate strength, kg sq mm	Elongation, per cent /=5D	Reduction of area, per cent	Impact toughness, kgm/sq cm	
					notch at axis of weld	notch at line of fusion
As welded	49.5-52.3	71.0-73.7	4.0-5.0	0	0.9-1.8	1.0-3.5
	50.9	72.5	4.5		1 4	1.8
Normalised . . .	37.5-39.9	66.6-69.6	23.0-28.0	41.2-45.9	3.75-5.25	4.5-6.0
	38.6	67.9	25.3	43.3	4.5	5.2

Referring to Table 49, the weld metal prior to heat treatment has a high strength and rather low ductility. After normalising, the weld metal is comparable to the parent metal both in strength and ductility.

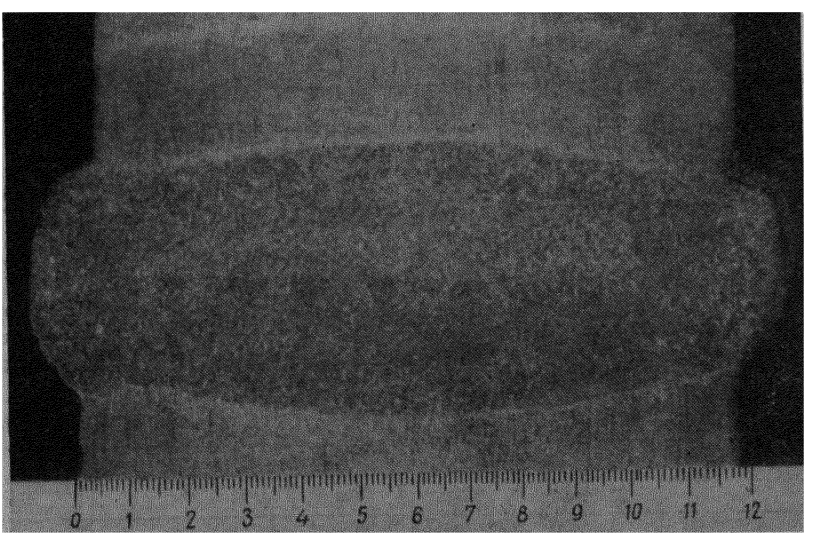

Fig. 186. Macrostructure of a welded joint in steel 40 made with a plate electrode of the same material

Fig. 186 is a macrograph of a welded joint before heat treatment. Fig. 188 shows the effect of normalising on the structure of the weld metal and the coarse-grain area. No hair cracks have been found in the fusion zone.

As has been noted elsewhere, fluxes based on calcium fluoride (CaF_2-CaO; CaF_2-Al_2O_3; CaF_2-CaO-Al_2O_3 systems) eagerly remove sulphur from the weld pool. Therefore it is possible to make electric slag welds with an increased carbon content without any danger of crystallisation cracks developing. Crack-free welds may be obtained in Grade 40 steel 70 mm thick by means of a plate electrode of a similar composition (Table 50).

The welding conditions are as follows: welding current, 1,300 a. a. c.; welding voltage, 24 v; flux, Grade АНФ-7 (80 per cent CaF_2, 20 per cent CaO); electrode cross section, 12×70 mm; joint gap, 32 mm; depth of the slag pool, 30 mm. When the flux used was Grade АН-8, the sulphur content of the weld metal was five times greater, and there were cracks in the weld. Fig. 187 shows, for the sake of comparison, sulphur replicas of welded joints made with Grade АН-8 flux (Fig. 187*a*) and with Grade АНФ-7 flux (Fig. 187*b*). It can be easily seen that in the latter case the weld contains appreciably less sulphur than when made with Grade АН-8 flux.

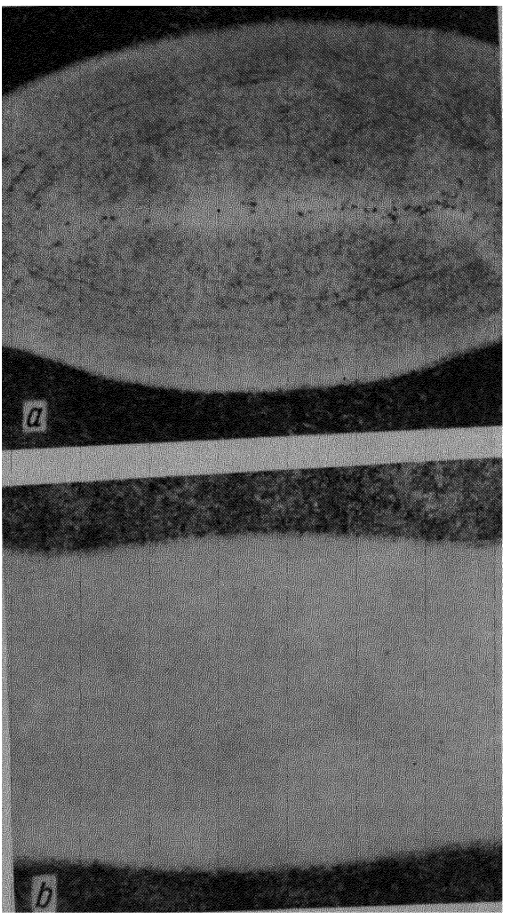

Fig. 187. Sulphur replicas of two welds made in steel 40 with various fluxes:
a—АН-8 flux (excess sulphur, cracks); *b*—АНФ-7 flux (little sulphur, no cracks)

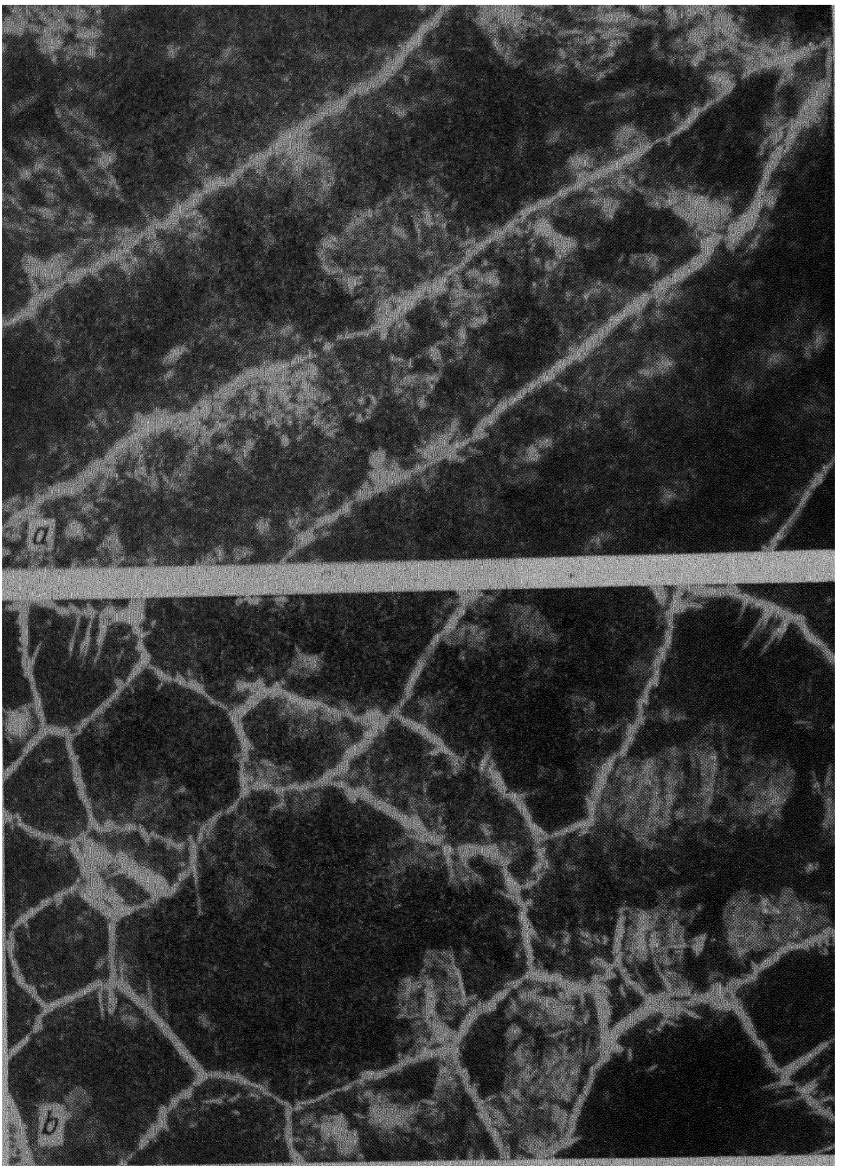

Fig 188 Micrographs of a welded joint in steel 40 made with
a—weld after welding; *b*—open-grain area after welding; *c*—

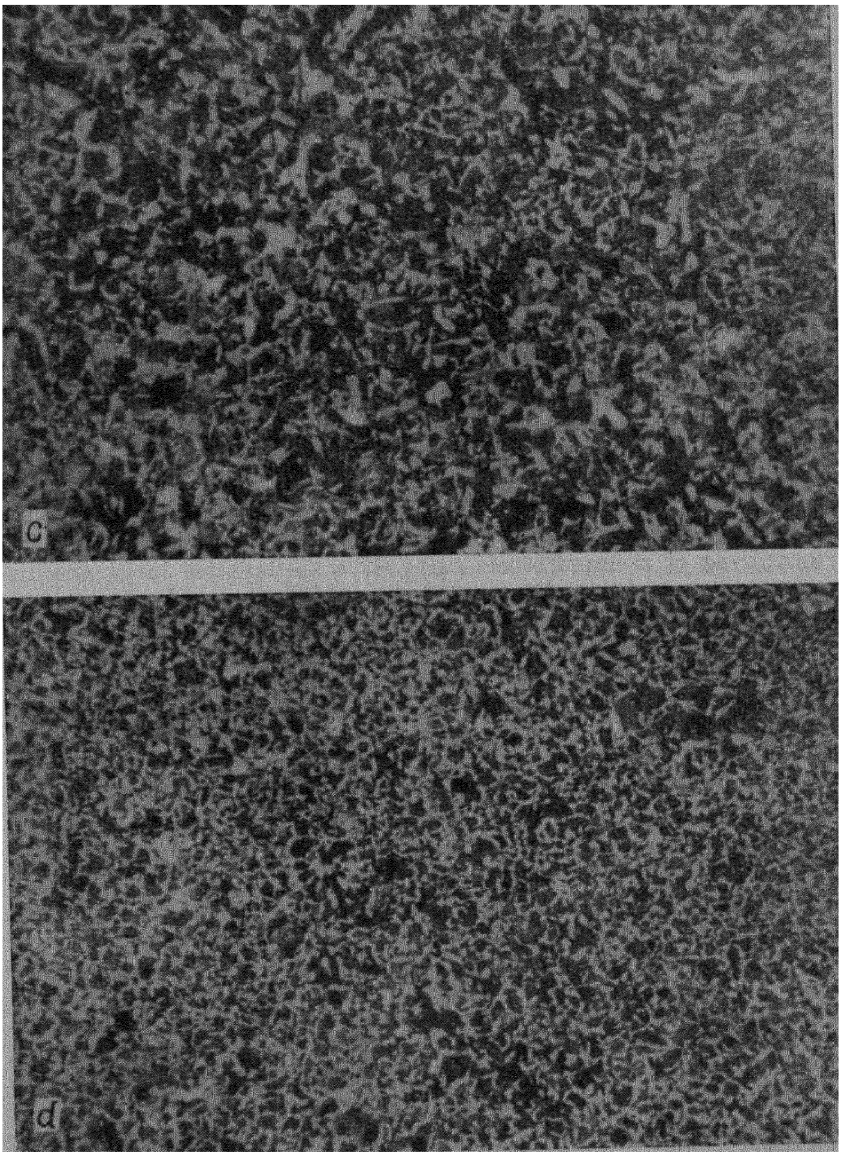

a plate electrode of the same material (magnification ×60): weld after normalising; *d*—open-grain area after normalising.

Table 50

Metal	Chemical analysis, per cent				
	C	Si	Mn	S	P
Steel 40	0.46	0.23	0.65	0.037	0.026
Plate electrode of steel 35	0.30	0.32	0.56	0.022	0.027
Weld metal	0.35	0.21	0.59	0.004	0.024

It may be presumed that further improvement in fluxes for electric slag welding will materially raise welding speed on steels containing 0.4 to 0.5 per cent of carbon.

2. Rimmed Low-carbon Steels

As compared with killed open-hearth steels, rimmed steel suffers from a number of basic drawbacks, the principal ones being pronounced chemical and physical heterogeneity. The internal layer of a rimmed steel ingot is contaminated with liquated and segregated structures and inevitably has deep-seated and honeycomb gas pockets.

The rolling of rimmed steels calls for a sufficiently large amount of reduction and elevated temperatures so that gas pockets may fuse well, although gas pockets with oxidised surfaces and non-metallic inclusions will not fuse. This is why rolled products from rimmed steel show a heterogeneous structure and widely varying mechanical properties which largely depend on what part of an ingot was rolled into the piece taken for inspection.

On the other hand, rimmed steel offers a number of advantages for industrial applications under certain conditions. Ingots of rimmed steel have a cleaner surface layer; rimmed steel shows a greater ability to deform in a cold state; and it is cheaper to make than killed steel.

Electric slag welding as applied to rimmed low-carbon steel differs in metallurgical aspects from what it is in the case of killed steel. Killed carbon steels may be successfully welded with Grade Св-08А, Св-08ГА or Св-10Г2 electrode wire which does not contain any silicon. The resulting welds are tight and have the desired mechanical properties. When silicon-free electrode wire is employed in welding rimmed steels, the welds are not tight, even if a high-silicon flux, Grade АН-8, is used. Apparently, the porosity is caused by the violent evolution of carbon monoxide due to the absence or lack of powerful reducing agents, such as titanium, aluminium or silicon, in the metal pool. In rimmed steel, electric slag welded with Grade Св-08 rimmed steel electrode wire, the weld metal has pipes. Fractures and exographs of welds made in rimmed steel show that the evo-

lution of carbon monoxide from the weld metal occurs in the direction of grain growth, away from the parent metal towards the axis of the weld. The periphery of the weld is affected by pipes, while the central section of the weld suffers from gas pockets. When the weld pool is deoxidised somewhat, for example, by adding ferrosilicium to the slag, the evolution of gas decreases to go on only in the central part of the weld, thus forming an axial pipe.

Hydrogen has little effect on the formation of gas pockets in the electric slag process. This has been borne out by the following experiment. An ingot was cast by the electric slag process, using alternating current and electrode wire of killed carbon steel (0.19 per cent C, 0.79 per cent Mn, and 0.37 per cent Si) and Grade AH-8 flux. To cause the metal pool to absorb as much hydrogen as possible, the surface of the slag pool was blown with steam. Though the hydrogen content of the metal pool was brought up to 9.6 ml/100 grams, no pores were found in the crystallised metal of the ingot. Only the top surface of the ingot showed shallow pin holes.

To prevent the weld metal of rimmed steels welded by the electric slag process from having pipes or gas pockets, it is advisable to employ electrode wire containing silicon or any other strongly deoxidising agent. Out of the welding wire grades available, preference should be given to Grade Св-10ГС. It is possible to obtain a dense weld metal in Grade Ст. 3 rimmed steel 40 mm thick by welding it with a Grade Св-10ГС single stationary electrode 3 mm in diameter, fed at the rate of 292 m/hr (welding current, 540 to 580 a, welding voltage, 40 v). The chemical analysis of the weld metal is given in Table 51.

Table 51

Metal	Chemical analysis, per cent				
	C	Mn	Si	S	P
Parent	0.22	0.65	Traces	0.018	0.043
Electrode, Grade Св-10ГС	0.12	0.98	0.79	0.031	0·015
Weld	0.15	0.84	0.45	0.026	0.019

The mechanical properties of the weld metal and welded joint without heat treatment are tabulated in Table 52.

According to the table, the weld metal without heat treatment has high mechanical properties. The spread of toughness values with the specimens notched in the fusion area may be attributed perhaps to the presence or absence of defects in the parent metal, inherent in rimmed steels, near the notches. The structure of the weld metal and the heat-affected area does not differ markedly from that of welds made in killed steels. Therefore, normalising may, when necessary,

Table 52

Weld metal				Toughness of notched sample, kgm sq cm		Bending angle of specimens 30×20 mm, deg
Yield point, kg sq mm	Ultimate strength, kg sq mm	Elongation, per cent l=5D	Reduction of area, per cent	along axis of weld	in fusion zone	
33 9-40.0 36 6	49.4-51.9 50.1	26.3-30.3 27.7	62.2-69.8 65.6	7.6-10.6 9.5	4.6-23.3 10.7	175-175 175

considerably improve the mechanical properties and toughness of the weld metal.

Grade Св-10ГС electrode wire and Grade АН-8 flux may also be used for welding Grade 0.5 rimmed low-carbon steel. The chemical analysis of a welded joint made with plates 120 mm thick and of the electrode wire are given in Table 53, while their mechanical properties without heat treatment are presented in Table 54.

Table 53

Metal	Chemical analysis, per cent				
	C	Mn	Si	S	P
Parent	0.03	0.2-0.22	0.03-0.05	0.021-0.032	0.013-0.015
Electrode	0.15	0.98	0.81	0.027	0.015
Weld	0.09	0.71	0.47	0.025	0.018

Welding conditions: two electrodes; 220-230 m/hr feed rate; 42 v welding voltage.

From Table 54 it will be seen that the weld metal has steady mechanical properties superior to those of the parent metal.

Table 54

Metal	Yield point, kg/sq mm	Ultimate strength, kg/sq mm	Elongation, per cent l=5D	Reduction of area, per cent	Toughness, kgm/sq cm
Parent . .	20.2-27.0 24.2	31.5-41.0 36.4	6.3-25.0 17.4	—	4.1-6.5 4.9
Weld . . .	24.4-25.1 24.9	43.5-43.8 43.7	28.3-35.0 31.7	53.3-55.6 54.4	13.5-18.9 15.9

Experience has shown that rimmed low-carbon steels may be welded by the electric slag process, provided the electrode wire

used has a lower silicon content than the standard Св-10ГС wire. The relevant data are given in Table 55. This wire produces sound and tight welds.

Table 55

Metal	Chemical analysis, per cent				
	C	Mn	Si	S	P
Parent	0.03	0.23	0.02	0.014	0.016
Electrode	0.15	1.40	0.40	0.037	0.029
Weld	0.09	0.79	0.16	0.028	0.024

In some cases rimmed steel may also be welded by the electric slag process, using two wire grades of different composition (Св-08ГА + + Св-10ГС). The relevant data are given in Table 56.

Table 56

Metal	Chemical analysis, per cent				
	C	Mn	Si	S	P
Parent	0.04	0.23	Traces	0.020	0.010
Electrode, Grade Св-08А .	0.10	0.45	Traces	0.017	0.023
Electrode, Grade Св-10ГС .	0.12	0.98	0.81	0.027	0.015
Weld	0.07	0.58	0.16	0.030	0.026

In some cases, when no killed steel electrode wire is available, use may be made of rimmed steel wire, Grade Св-08 or its equivalent, provided the rimmed steel structure to be welded is not intended for critical application. However, the metal pool should be deoxidised to avoid porosity. This can be done by adding small pieces of aluminium or aluminium wire to the weld pool at regular intervals.

When welding rimmed steel, tight welds can also be made by adding a relatively small amount of silicon to the metal pool. Therefore, there is no need to use Grade Св-10ГС wire or the wire indicated in Table 55. Wire of a killed plain low-carbon steel will do.

3. Boiler Carbon Steels

Electric slag welding is widely employed in the fabrication of medium and high pressure boilers which are usually made of quality carbon steels. The chemical analyses of these steels are given in Table 57.

Use is made mainly of steel 22K whose mechanical properties are as follows: ultimate strength, 44 kg/sq mm; yield point at +320°,

Table 57

Steel grade	Chemical analysis, per cent						
	C	Mn	Si	S	P	Cr	Ni
22K	0.18-0.25	0.7-0.9	0.17-0.37	0.040	0.040	0.30	0.30
20K	0.16-0.24	0.35-0.65	0.15-0.30	0.040	0.040	—	—
15K	0.12-0.20	0.35-0.65	0.15-0.30	0.040	0.040	—	—

18 kg/sq mm minimum; elongation, 20 per cent minimum in 1=10D; toughness at +20°, 7 kgm/sq cm minimum.

From these data it may be concluded that steel 22K is a killed structural carbon steel with a somewhat increased manganese content. For this reason, even heavy sections have high mechanical properties, although the carbon content is relatively low (not over 0.25 per cent). Steel 22K goes to make boilers in which the temperature of the metal does not exceed 500°. Any further temperature rise will sharply reduce the creep strength of carbon steel and will result in heavy scaling. Therefore special steels are employed for service under such conditions.

An important advantage of steel 22K is its relatively low carbon content, which reduces hot cracking in the weld metal and makes it less likely for low-plastic hardening structures to develop in the near-weld zone.

Due to its excellent processability, steel 22K is also employed widely in the fabrication of critical parts welded by the electric slag process (hydraulic press frames, oil refining equipment, etc.).

At the present time, girth and longitudinal seams are made by the electric slag process in steel 22K with a thickness of 50 to 300 mm.

The welds and welded joints made in steel 22K have to meet very stringent requirements.

The weld metal should be resistant to hot cracking, dense, homogeneous, free from gas pockets and slag inclusions, well formed, and should have no poor fusion or undercuts.

After the appropriate heat treatment, the weld metal and welded joint should be comparable in strength with the parent metal.

The resistance of the weld metal to cracking is governed by a number of factors of which the prevailing ones in welding boiler steels are the direction of growth of columnar crystals. An indication as to the direction of growth of columnar crystals is given by the aspect ratio of a weld. The relation between the aspect ratio and the critical carbon content of the weld metal for steel 22K welded by the electric slag process is given in Fig. 189.

From Fig. 189 it will be seen that when the aspect ratio $\psi=1.5$, cracks develop with as low a carbon content as 0.17 per cent. When $\psi=3$, the carbon content may be increased 1.5 times without any

danger of hot cracking, provided all other conditions are equal. As was shown in Chapter II, the aspect ratio of the weld pool is determined by the welding conditions.

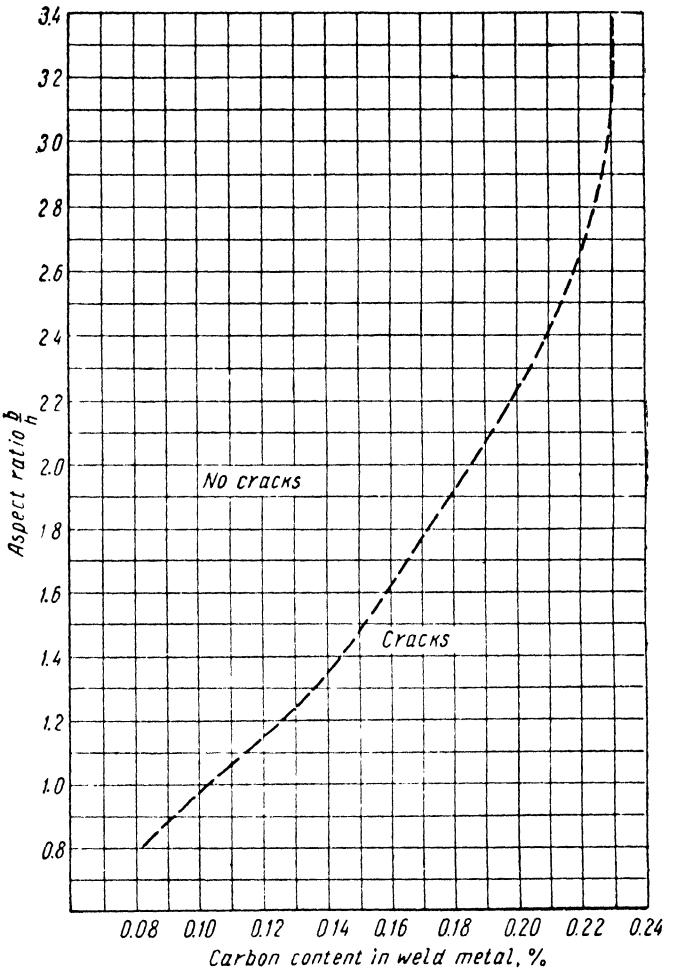

Fig. 189. Carbon content in welds plotted as a function of aspect ratio at which no crystallisation cracks occur. 0.7-1.5 per cent Mn; 0.35 per cent Si; Mn/Si≥18.

Under commercial conditions, Grade 22K steel is welded with Св-08ГА, Св-15Г, and Св-10Г2 electrodes and АН-8 and ФЦ-7 fluxes.

With everything else being equal, the weld metal in the case of Св-08ГА or Св-10Г2 wire has a somewhat higher resistance to crys-

tallisation cracks than in the case of Св-15Г electrode wire. However, as will be shown later, Св-08ГА electrode wire does not produce a full-strength weld.

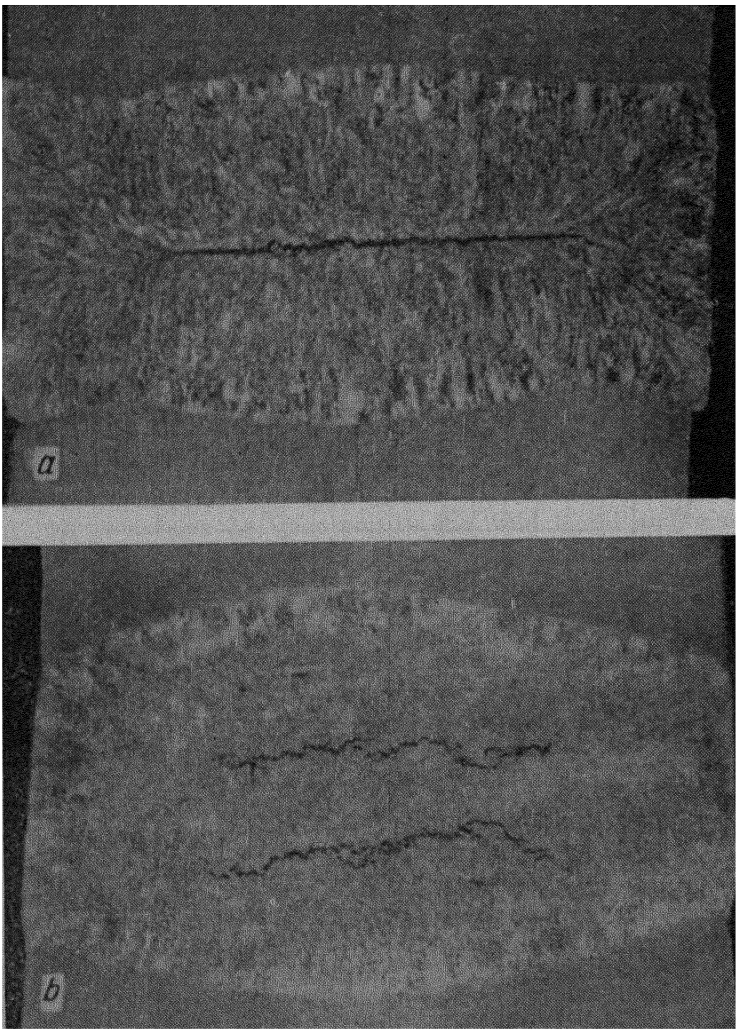

Ftg. 190. Cracks in the weld metal:
a—between end faces of crystalline grains along the axis of weld; *b*—between branches of adjacent grains

Though the carbon content of the weld metal is limited when boiler steels are welded with low-carbon electrode wire (Св-08ГА and

Св-10Г2), unfavourable conditions of crystallisation may result in cracking (Figs. 190*a* and *b*). Therefore, the welding conditions should be such as to ensure the optimum value of the aspect ratio in each case.

The welding conditions recommended for longitudinal and girth seams in steel 22K should be corrected to take into account the actual production conditions. Use should be made of alternating current and АН-8 or ФЦ-7 flux.

Joint gap, mm	28+2
Grade and diameter of electrode wire, mm	Св-10Г2· 3
Dry length of electrode, mm	65+5
Depth of slag pool, mm, at the following electrode speed, m/hr,	
200	45-40*
300	55 50
400	60-55
500	70-60
Rate of weaving motion, m/hr	30-40
Distance from electrode to moulding shoe in extreme position, mm	7-9
Dwell of electrode at moulding shoe, sec:	
for metal thickness per electrode of 50 mm	2-3
for metal thickness per electrode up to 100 mm	3-4
Distance between adjacent electrodes in extreme positions, mm	12-14
Maximum electrode speed, m/hr, and currents:	
for metal thickness per electrode of 50 mm	200 m/hr; 450 a
for metal thickness per electrode of 100 mm	380 m/hr; 675 a
Welding voltage, v	44-48

The maximum electrode speeds quoted above are valid for cases when steel 22K has the highest carbon and sulphur content. The metal of electric slag welds is of a high quality, but deviations from the welding conditions specified in the table may result in poor fusion, undercuts and gas pockets.

No gas pockets or slag inclusions are observed, as a rule, in killed boiler steels. However, pores may sometimes appear in the weld, should the scale forming on the edges in rolling find its way into the weld pool. Therefore, a good deal of attention should be devoted to the removal of scale from the edges to be welded. Св-10Г2 electrode wire improves the resistance of the weld metal to porosity.

The mechanical properties of welds and welded joints in boiler steels are determined by the structure and chemical analysis of the weld metal and the near-weld zone. When operating under the welding conditions usual for steel 22K, the structure is usually of the first type. As has been noted elsewhere, this type is remarkable for the presence of two areas (Fig. 191): one of coarse columnar crystals around the perimeter of the weld, and the other of fine columnar crystals in the middle of the weld. Microsections of such welds sometimes show small isolated areas of an equiaxial structure along the

* The left-hand column refers to the case when the thickness of parent metal per electrode is 50 mm, and the right-hand column, when the thickness is 100 mm.

axis of the weld. Microsections of the weld metal and the near-weld zone have shown that immediately adjoining the weld is an area 4 to 8 mm wide, of a coarse-grained Widmanstatten structure. The total width of the near-weld zone is 20-23 mm. The size of grains in the coarse-grained area of the near-weld zone is in excess of what is usually stipulated. Lying beyond the coarse-grained area is a fine-grained area usually of ferrite plus pearlite. The weld metal in the coarse-grained area has a ferrite plus pearlite Widmanstatten structure.

Fig. 1. Macrostructure of a weld.

The weld metal in the area of fine columnar crystals has a Widmanstatten structure, but somewhat coarser than in the first area. The grains in this case are somewhat smaller than in the previous area. The weld metal prior to heat treatment shows both ununiform structure and widely varying mechanical properties. The weld metal in the area of fine columnar crystals has lower mechanical properties than in the area of coarse columnar crystals. Therefore, test specimens should be taken from the area of fine crystals.

Critical weldments of steel 22K made by the electric slag process should be normalised at 900 to 910°C and tempered at 650 to 670°C so as to relieve the residual stresses built up in welding, to refine and equalise the structure and properties of individual areas in welded joints.

After heat treatment, the weld metal has ferrite and sorbitic pearlite ununiformly distributed, and axially oriented columnar crystals. The grain size of the weld metal is No. 7 or 8.

In the near-weld zone, the Widmanstatten structure is completely removed. The pearlite is distributed with sufficient uniformity. The

Table 58

Mechanical Properties of Welds Made with Various Electrode Wire Grades

Specimen from	Wire grade	Flux grade	Tensile tests				Toughness, kgm sq cm	
			Yield point, kg/sq mm	Ultimate strength, kg/sq mm	Elongation, per cent $l=5D$	Reduction of area, per cent	at −20° C	at +20° C
	Св-08ГА	АН-8	23.8-27.3 / 25.4	41.8-44.1 / 43.4	28.1-34.3 / 32.0	48.9-54.7 / 52.1	7.3-8.3 / 7.8	8.4-11.5 / 10.9
		ФЦ-7	27.0-29.5 / 27.2	45.0-45.5 / 45.4	22.5-32.6 / 28.7	53.0-54.1 / 53.2	—	—
Fine-grained area in weld metal	Св-15Г	АН-8	30.4-34.0 / 32.5	51.9-53.0 / 52.4	36.1-36.8 / 36.3	51.1-55.6 / 54.8	8.4-9.1 / 8.8	10.4-12.3 / 11.5
	Св-10Г2	АН-8	34.0-34.8 / 34.3	51.0-53.5 / 53.1	26.0-30.8 / 28.1	49.5-55.6 / 53.8	6.3-7.7 / 7.5	8.6-8.9 / 8.8
	Св-08ГА	АН-8	28.7-33.2 / 31.8	44.1-46.8 / 45.8	21.3-22.1 / 22.8	40.1-40.8 / 40.5	—	—
Coarse-grained area in weld-affected region	Св-15Г	АН-8	29.4-33.4 / 31.5	43.9-48.8 / 46.9	21.5-24.3 / 23.8	40.1-41.3 / 40.8	6.9-8.1 / 7.3	10.3-12.2 / 11.4
	Св-10Г2	АН-8	29.7-31.8 / 31.1	44.2-48.6 / 45.5	20.3-23.3 / 20.8	41.8-42.2 / 42.1	—	—
Parent metal	—	—	27.6-28.3 / 27.4	44.1-45.8 / 45.4	22.1-22.4 / 22.2	40.8-41.1 / 40.9	7.4-8.3 / 7.9	11.1-13.3 / 12.1

grain size in the near-weld zone is No. 6 or 7 while outside the heat-affected area it is No. 5.

The mechanical properties of welds made in boiler steels by the electric slag process depend mainly on the chemical analysis of the weld metal. In electric slag welding performed under normal conditions, the rate of cooling of the weld varies within narrow limits, and, as distinct from arc welding, has an insignificant effect on the properties of the weld.

Table 58 presents data on how the composition of electrode wire affects the mechanical properties of non-heat-treated welds. Tests were made on specimens of three types.

The table also gives the chemical analysis of welds made with various electrode wire under average welding conditions.

According to Tables 57 and 58, the weld metal in the case of Св-08ГА is at the lower strength limit of the parent metal before heat treatment and will not have full strength after heat treatment.

If the strength of the weld metal is not to be impaired by a decrease in its carbon content, the weld should be alloyed with manganese, which may be accomplished by using Св-10Г2 electrode wire (Table 59).

Table 59

Flux grade	Wire grade	Chemical analysis of weld metal, per cent				
		C	Mn	Si	S	P
АН-8	Св-15Г	0.17-0.20	0.61-0.87	0.12-0.22	0.018-0.038	0.02-0.034
	Св-08ГА	0.14-0.16	0.60-0.84	0.14-0.24	0.018-0.037	0.02-0.036
	Св-10Г2	0.15-0.18	1.3-1 6	0.14-0.25	0.021-0.038	0.018-0.035
ФЦ-7	Св-15ГА	0.17-0.19	0.65-0.8	0.18-0.25	0.02-0.035	0.021-0.037
	Св 08ГА	0.14-0.16	0.63-0.85	0.14-0.21	0.018-0.033	0.02-0.035

Table 60 shows what effect heat treatment (normalising and tempering) has on the mechanical properties of the weld metal. Heat treatment somewhat reduces the strength but improves the ductility and toughness of the weld metal. Tensile tests on welded joints made with Св-10Г2 and Св-15Г electrode wire have shown that the weld metal is comparable in strength with the parent metal. From Table 60 it may be inferred that welds made with Св-10Г2 and Св-15Г and heat treated fully meet the requirements for the parent metal.

However, as has been noted elsewhere, Св-15Г wire somewhat reduces the resistance of the weld metal to crystallisation cracks. Therefore, it would be good practice to weld steel 22К with Св-10Г2 electrode wire.

Table 60

Wire grade	Flux grade	Heat treatment	Yield point, kg/sq mm	Ultimate strength, kg/sq mm	Elongation, per cent $l=5d$	Reduction of area, per cent	Impact toughness, kgm s.i cm	
							at −20°	at +20°
Св-08ГА	АН-8	No	23.4-27.0 / 26.1	44.2-45.5 / 44.7	28.6-33.6 / 31.1	45.9-51.7 / 48.6	6.0-8.3	9.4-11.5
		Yes	25.4-26.9 / 25.8	42.0-44.4 / 43.8	40.0-46.6 / 43.1	66.0-66.0 / 66.0	7.6-11.8	14.0-16.6
	ФЦ-7	No	26.0-29.5 / 27.2	45.0-45.5 / 45.4	22.6-32.6 / 28.7	53.0-66.5 / 61 7	—	12.7-16.3
		Yes	23.0-26.0 / 25.0	42.5-46.6 / 43.0	29.0-34.0 / 32.0	58.0-67.5 / 63.3	—	8.1-16.7
Св-10Г2	АН-8	No	33.9-36.4 / 35.7	54.8-57.9 / 56.3	25.1-33.1 / 29.4	51.0-61.1 / 55.1	7.3-7.9	10.8-11.8
		Yes	29.8-31.6 / 30.4	48.5-50.0 / 49.1	29.1-38.3 / 33 4	53.0-66.5 / 61 7	12.3-13.3	17.0-18.5
Св-15Г	ФЦ-7	No	28.1-30.3 / 28.4	46.3-49 4 / 48 3	26.9-28 / 27.1	49.1-59.9 / 53 4	—	8.4-11.7
		Yes	26.0-26.5 / 26.3	42.3-51.1 / 48.0	30.1-33.3 / 32.8	59.9-59.9 / 59.9	—	11 9-14.1

Referring to Table 61, the strength of the weld metal as tested at +320° C is comparable with that of the parent metal even if use is made of Св-08ГА wire and ФЦ-7 flux.

Table 61

Weld	Test temperature, °C	Yield point, kg/sq mm	Ultimate strength, kg/sq mm
As welded	320°	27.5-32.0 / 29.3	54.5-56.0 / 55.5
Upon heat treatment	320°	21.0-24.0 / 22.6	43.6-50.0 / 48.0

The tests carried out on large specimens by the Electric Welding Institute showed that, when statically loaded, the weld metal of joints made in steel 22K was not sensitive to a sharp concentration of stresses (although the weld metal developed crystallisation cracks). When tested at +20°C, the welded joint showed plastic failure in the parent metal. The ultimate tensile strength of the parent metal was more than 48 kg/sq mm.

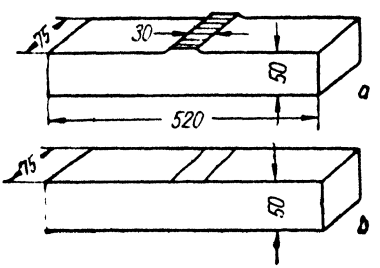

Fig. 192. Test specimens for fatigue tests:
a—specimen with reinforced weld; b—specimen with reinforcement removed.

The fatigue tests of welded joints made in steel 22K were conducted at the Central Heavy Engineering Research Institute on specimens with and without reinforcement (Fig. 192). The 10,000,000-cycle tests were made on a УП-50 machine. The loading was alternate tension and compression of equal values obtained by rotating the specimens while under a bending load. The results are tabulated in Table 62.

As can be seen from the table, the lowest endurance limit was shown by welded joints with reinforcement left intact and without heat treatment (their endurance limit was 8.5 kg/sq mm as against 15.5 kg/sq mm for the parent metal). Heat treatment did not appreciably improve the endurance limit of welded joints on which the reinforcement had been left intact (the endurance limit was 11.5 kg/sq mm as against 8.5 kg/sq mm). The removal of weld reinforcement raised the endurance limit to 14.0 kg/sq mm.

Peening raised the endurance limit of welded joints to 17.8 kg/sq mm even when the weld reinforcement was left intact. Thus, the

Table 62

Specimen	Heat treatment	Endurance limit, kg/sq mm
Parent metal	None	15.5-16.5
Reinforced weld	None	8.5
Ditto	Tempering at 650°; held for 2 hrs.	11.0
Ditto	Normalising at 920°; held for 1 hr.	11.5
Weld with reinforcement removed	None	14.0
Ditto	Tempering at 650°; held for 2 hrs.	15.5
Ditto	Normalising at 920°; held for 1 hr. Tempering at 650°; held for 2 hrs. . .	14.0
Reinforced weld after peening	None	17.5
Weld without reinforcement after peening	None	17.2

Note: The specimens were peened with a bobbing tool operating at the rate of 1,000 blows per min, the specimens moving at the rate of 0.8 m/min; the distance between adjoining rows of identations was 2 mm, the force of the spring when cocked was 44 kg, and the bobbing tool was 10 mm in dia.

endurance limit of welded joints made in steel 22K by the electric slag process may be raised to that of the parent metal by removing the weld reinforcement or by cold hardening.

4. Medium-alloy Steels

Alloy steels differ from plain-carbon structural steels in that they have a higher strength. The use of alloy steels in modern machine building is motivated by the desire to reduce the weight of structures as greatly as possible and to obtain long-service life at elevated temperatures and pressures, resistance to corrosion and some other special properties.

Alloy steels are classified into (a) low-alloy, containing up to 2.5 per cent of alloying elements; (b) medium-alloy, containing from 2.5 to 10 per cent of alloying additions, and (c) high-alloy, containing more than 10 per cent of alloying agents.

Critical thick-walled structures are made mainly of medium-alloy chromium-nickel-molybdenum steels, such as 25X3HM, 30XH3M, 30X2H3M, etc. These steels are deeply hardenable; when appropriately heat-treated or refined (which involves hardening followed by tempering to sorbite) they have a high strength, impact toughness, and ductility (ultimate strength, 80-120 kg/sq mm; yield

point, 60-100 kg/sq mm; elongation, 13-17 per cent in $l=5D$; and impact toughness, 18-6 kgm/sq cm).

The fact that medium-alloy steels contain alloying elements and have an increased carbon content makes them sensitive to welding heat.

As will be recalled, near-weld cracks may develop in these steels when arc welded due to the overheating of the near-weld zone and the formation of brittle hardening structures accompanied by appreciable welding stresses. The increased content of carbon, silicon and nickel increases the danger of crystallisation cracking in the weld metal.

As has already been noted, a feature of electric slag welds is a broad near-weld zone incorporating an overheated area and a coarse columnar structure in the weld metal. As a result, the weld metal has lower mechanical properties. In plain low-carbon steels this is sometimes of minor importance. In more critical structures, resort has to be made to tempering or normalising so as to relieve stresses and to improve mechanical properties. When electric slag welding is applied to medium-alloy steels, the near-weld zone has an increased hardness as the parent metal is capable of hardening in the air. The near-weld zone and weld show high strength, reduced ductility and low toughness, especially at low temperatures.

If the welded joints made in medium-alloy steel are to be of full strength, they should be quenched in water or oil and annealed, as specified for the parent metal. Such heat treatment will completely eliminate the effect of overheating. When electric slag welding is applied to plain carbon steels, the desired mechanical properties of the weld metal are obtained by using Св-10Г2, Св-10ГС or Св-08ГА electrode wire. In the case of medium-alloy steels the weld metal may be improved by adding the appropriate alloying elements, depending on the desired mechanical properties and on whether the workpiece will be heat-treated.

As was noted in Chapter II, the thermal cycle has an effect on the increased resistance of the near-weld zone in medium-alloy steels to quench-cracks. However, though cracks in the near-weld zone of these steels are rare, quench-cracks may develop in a combination of unfavourable factors.

In some cases, the workpiece welded by the electric slag process cannot be fully heat-treated because of the lack of the necessary equipment and of the large size of the workpiece. Therefore, the existing welding procedures for medium-alloy steels have either to dispense with post-welding heat treatment or make use of stress-relief annealing without preceding hardening.

Here are the basic features of electric slag welding as applied to medium-alloy hardening steels.

1. *The near-weld zone.* The structure and properties of the near-weld zone are determined by the thermal cycle. As was noted in Chapter II, the thermal cycle of the electric slag process differs from tha

of arc welding in that (a) the rate of heat input is considerably slower; (b) overheating is more pronounced; and (c) the cooling in the pearlitic and, especially, martensitic field is slow.

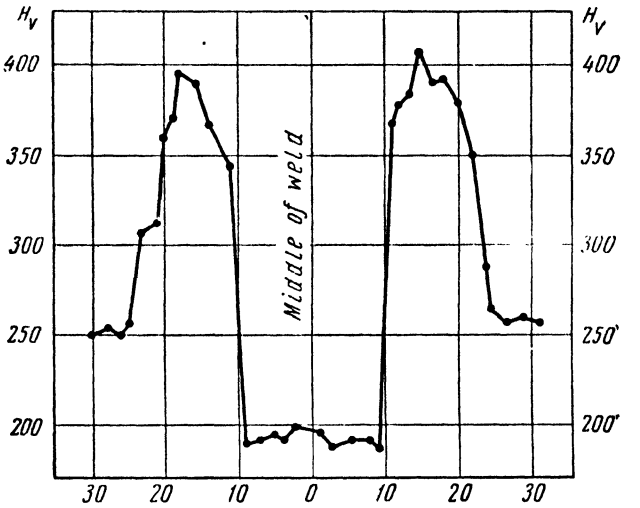

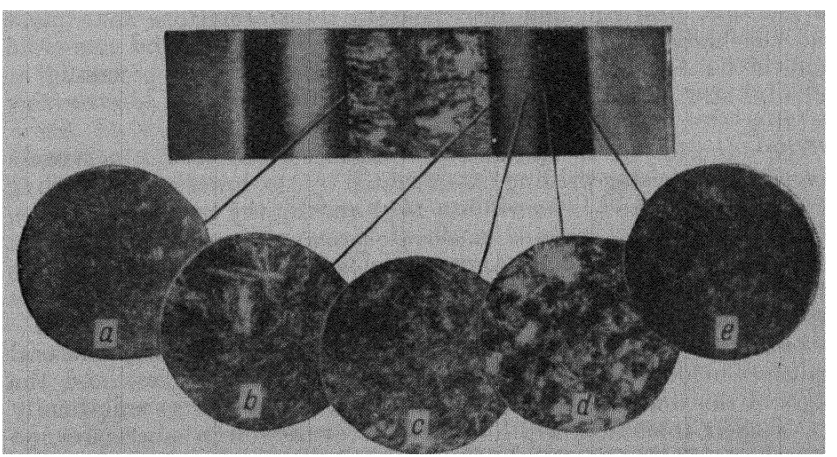

Fig. 193. Microstructure and hardness of 30X2H3MA Cr-Ni-Mo steel in near-weld zone after electric slag welding (magnification ×300).

Let us examine the structure of the near-weld zone in steel 30X2H3MA, which is a typical medium-alloy steel. Running directly along the line of fusion is a narrow streak of non-oriented troostite (Fig. 193*a*). This streak owes its origin to the decarburisation of the near-weld zone at the line of fusion when the solid and molten metal

come in contact during welding. In this case, and due to the different solubility of carbon in solid and molten metal, the carbon moves from the solid to the molten metal, even if its concentration be the same in both. Further, decarburisation may be conditioned by the diffusion of carbon from the parent to the weld metal due to the latter's lower carbon content. The transfer of carbon may also take place as a result of reactive diffusion when the weld metal has a high content of carbide-forming elements.

As it moves away from the weld, the streak of non-oriented troostite changes into an area of coarse acicular crystals (Fig. 193*b*) formed in the intermediate and martensitic field.

Then the coarse acicular crystals gradually change into finer crystals (Fig. 193*c*) and again turn into a troostitic streak of considerable width (Figs. 193*d* and *e*).

The wide streak of disoriented troostite at the end of the near-weld zone is formed due to the segregation of the austenite caused by the heating of this area to the lower austenitising temperatures. The near-weld zone is wider in electric slag welding than in arc welding. Its width increases with the joint gap and welding voltage.

In electric slag welding, the maximum hardness in the near-weld zone is 400 Vickers at a distance of 4.5 mm from the line of fusion, while in arc welding it is 550 Vickers within 2 mm. This is an indication that pearlitic and intermediate transformations take place and the martensitic transformation is suppressed in the near-weld zone of hardening steels welded by the electric slag process. The acicular structures in the near-weld zone in the case of electric slag welding etch more readily than in arc-welded joints.

The suppression of martensitic transformation in the near-weld zone in electric slag welding is facilitated by the lower rate of cooling in the pearlitic and intermediate field and by the longer time when the near-weld zone remains at elevated temperature which, in turn, leads to high-temperature segregation (as has been established, the high-temperature segregation of austenite followed by cooling favours its decomposition in the field of intermediate transformations).

As the stresses in the near-weld zone are relieved by the structural transformations accompanying the electric slag process, and the edges of the workpiece are heated simultaneously and symmetrically across their thickness, while there is no distortion in most cases, no quench-cracks form in this zone.

The high resistance of the near-weld zone to quench-cracks in electric slag welding has been confirmed under both laboratory and shop conditions in carbon steels 40, 50 and 40H, chromium-nickel-molybdenum steels, steel 30ХГСА and other steels liable to develop cracks when arc-welded.

The properties of the near-weld zone and their response to various types of heat treatment have been studied in detail for steel 30Х2Н2М. The quality of the near-weld zone was assessed on the

basis of the toughness and fracture of notched specimens with notches made in different areas of the near-weld zone.

Table 63 describes welds made in plates 100 mm thick with Св-10Г2 wire, АН-8 flux, a welding current of 450 to 500 a (per electrode), a welding voltage of 40 v a. c., and a welding speed of 40 m/hr.

Table 63

Heat treatment	Impact toughness, kgm/sq cm, in various areas of near-weld zone at temperatures, °C					
	Coarse-grained area (2 mm from line of fusion)		Middle areas (4-12 mm from line of fusion)		End area (18 mm from line of fusion)	
	−70	+20	−70	+20	−70	+20
None	1.5-7.9 / 4.3	3.2-5.9 / 4.4	2.3-7.1 / 5.0	11.4-13.5 / 13.1	6.3-7.6 / 7.1	7.8-8.3 / 8.1
Annealing	1.9-9.5 / 4.7	7.3-8.5 / 8.1	10.4-16.4 / 13.1	19.6-22.1 / 20.5	13.3-17.4 / 15.7	21.8-22.1 / 21.8
Hardening, and annealing	12.6-14.6 / 13.3	11.6-13.7 / 13.1	19.4-19.8 / 19.0	19.4-22.1 / 20.3	16.4-18.9 / 17.5	19.4-20.9 / 20.2

As can be seen, the weld metal in the near-weld zone has a low toughness at low temperatures. The fractures are coarse-grained or flake-shaped in the coarse-grained area, and fine-grained in other areas. They reflect the structural changes in the near-weld zone of these steels and testify to the tendency of the metal to brittle failure. Tempering (heating to 600° C, holding for 3 hrs. and cooling in water) fully restores toughness in the middle and end areas of the near-weld zone. The appearance of fractures is also improved, becoming fibrous at normal test temperatures. In the overheated area the toughness and fracture are not practically improved by tempering.

As will be recalled, the effect of overheating in medium-alloy steels may only be eliminated by single and, more often, by double recrystallisation, sometimes preceded by homogenising annealing.

As follows from Table 63, the properties of the metal in the overheated area of the near-weld zone are fully restored by hardening and tempering. In hardening the metal was heated to 870°, held at this temperature for 6 or 7 hours, and quenched in water, i. e., treated as the parent metal.

From the data obtained, it can be concluded that the effect of overheating in the near-weld zone in the case of single-pass electric slag welding can easily be eliminated, and it differs from the overheating which takes place in furnace heat treatment.

In some cases, hardening steels welded by the electric slag process may develop cracks in the near-weld zone. There are two types of

near-weld cracks: quench-cracks (Fig. 194) and transverse tears (Figs. 195 and 196) running near the line of fusion in the overheated area.

A. *Quench-cracks* were observed under the following unfavourable conditions:

(a) an increased rate of cooling in the near-weld zone, especially at the beginning of the weld, which does not occur when the welding

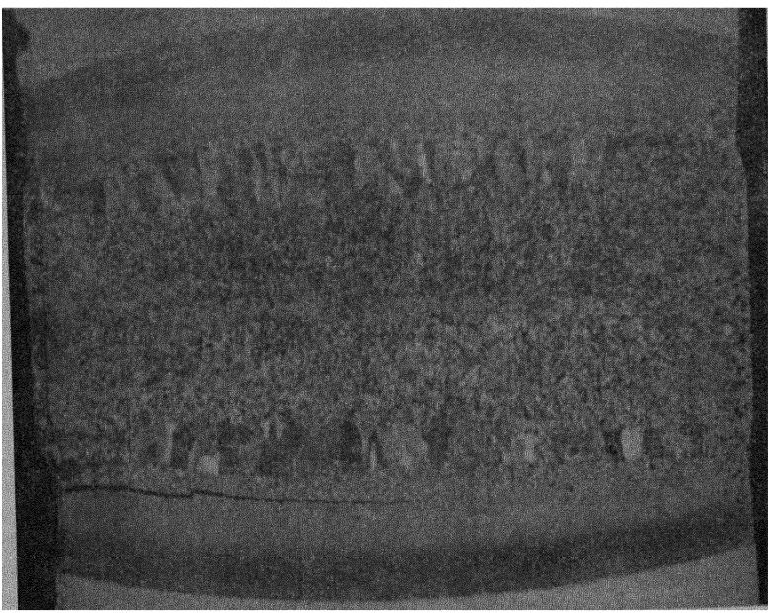

Fig. 194. Quench crack in near weld zone in medium-alloy steel welded by the electric slag process

procedure is normal, i. e., goes on at a steady rate (at the beginning of the weld, the thermal cycle of electric slag welding is similar to that of single pass arc welding in the downhand position with heavy current and high voltage);

(b) the plates being welded are rigidly held together by the welds made before, which may take place when the weld was restarted after an interruption.

In some cases quench cracks appeared when there was poor fusion along the edges and also when flux AHD-1 (fluorspar) was used in order to reduce the width of the weld affected zone. Poor fusion along the edges promotes cracking, as stresses concentrate there. Flux AHD 1, as was noted in Chapter III, calls for a low welding voltage,

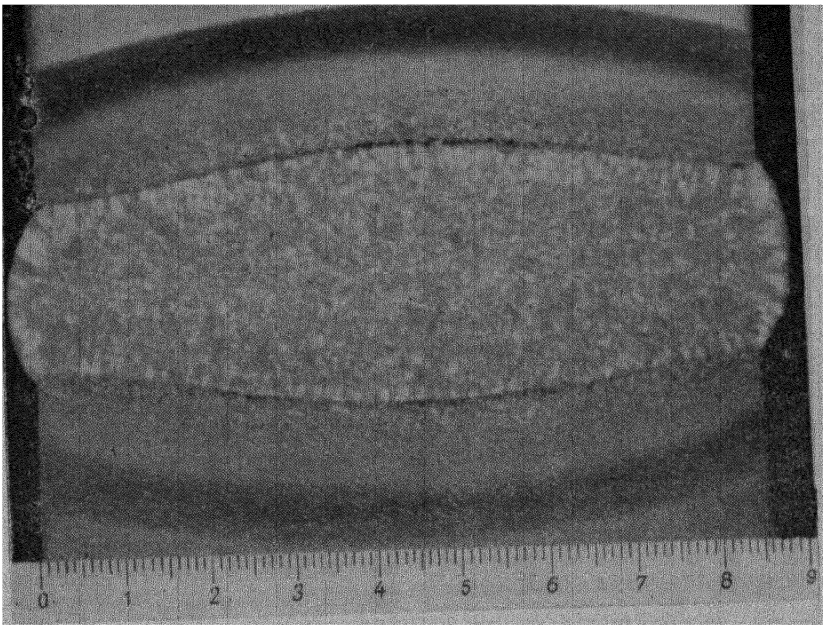

Fig. 195. Tears in near weld zone at line of fusion in electric slag welding.

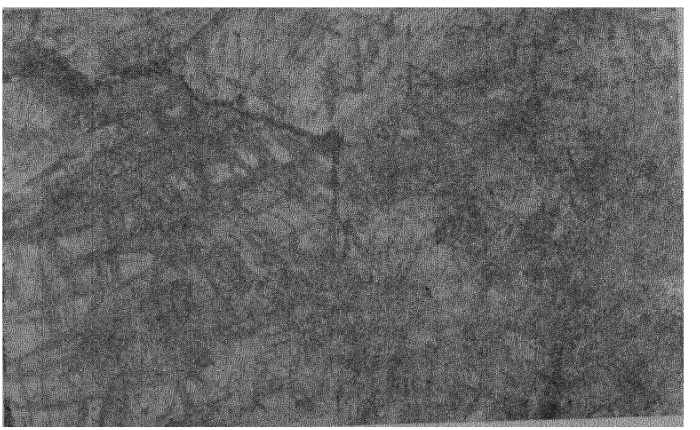

Fig. 196. Microsection of near-weld zone with tears.

which reduces the heat input and increases the rate of cooling of the weld-affected zone.

When welding medium-alloy hardening steels, it is advisable to avoid high welding speeds (heavy currents), use of many electrodes, reduced joint gaps, or low voltages which may be resorted to in an attempt to reduce the width of the weld-affected zone. The welding current should be limited to 300 or 350 a, i. e., the electrode speed should be reduced accordingly.

In the case of rigid structures or parts clamped rigidly in place, an efficient way of preventing cracks in joints slag-welded in medium-alloy steels is to preheat the edges and to hold them at 150° to 200° C during welding, as in the welding of plain carbon steels.

In straight slag-welded joints in medium-alloy steels, quench-cracks can be efficiently controlled by using starting tabs. These tabs should be made longer so that a steady-state condition may be achieved before the workpiece is reached (Fig. 197).

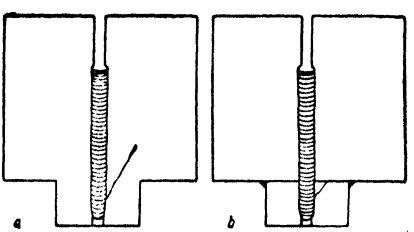

Fig. 197. Incorrect (*a*) and correct (*b*) use of starting tabs.

The tendency of medium-alloy hardening steels to crack in the near-weld zone in arc-welding is well known. However, there is no agreed opinion as to the nature and causes of such cracks. To date two working hypotheses have been advanced: a quench hypothesis and a hydrogen hypothesis. According to the first one, cracks are brought about by the quench phenomena occurring in the near-weld zone of medium-alloy steels. The proponents of the hydrogen theory believe that cracking is caused mainly by the accumulation of hydrogen in the near-weld zone due to of diffusion from the weld metal. In practice, however, there have been cases at variance with either hypothesis. On the other hand, experimental data seem to confirm the view that quench phenomena play a decisive role in cracking. Hydrogen also acts as a crack-inducing agent, but its influence is of minor importance.

From the viewpoint of the quench theory, the electric slag process has, as has been noted elsewhere, a number of advantages tending to improve the resistance of the near-weld zone to cracking.

Meanwhile, from the viewpoint of the hydrogen theory, electric slag welding also possesses positive features due to which hydrogen is not likely to bring about cracking.

As has been found experimentally, the hydrogen content in electric slag welds is but a fraction of what it is in downhand arc welds.

B. Near-weld tears. These cracks have poorly defined edges and occur along grain boundaries in the overheated area, in the vicinity of the line of fusion (Figs. 195 and 196).

Tears occur in the near-weld zone of most medium-alloy steels, when welding conditions are unfavourable and use is made of ferrite wire, but do not occur, when austenitic wire is employed. It has been found that in most cases tears develop in the near-weld zone of welds with poorly penetrated edges when the melting zone is far from the surface of the metal pool. In welds with well-penetrated edges (10-15 mm) these cracks are usually not to be observed.

It has been suggested that tears are brought about by the unfavourable deformation cycle of the edges sweated by the slag pool far from the surface of the metal pool. When the edges of the parent metal begin to melt well above the surface of the metal pool, some areas of the parent metal over the metal pool may be cooled to below the melting point. When cooling, these areas expand before the melted space fills with molten metal. As the overheated metal, especially along the grain boundaries, has a low ductility and strength, this gives rise to tears. When the space bounded by the sweated edges is filled with molten metal, the tears on the weld side are partially closed, while open tears grow to a macroscopic size in subsequent cooling. There are also other opinions as to the nature of the tears that are sometimes found in carbon steels.

Experience has shown that tears in the superheated area of the near-weld zone may be prevented by using fluxes and welding procedures with which the edges will begin to melt as near to the surface of the metal pool as possible. It has also been found that an increase in the depth of the slag pool facilitates the formation of tears. The use of fluxes having high electric conductivity and, as a result, reducing penetration, may also lead to tears.

2. *The weld metal.* As was noted in Chapter II, the proportion of the parent metal in the weld metal, in the case of slag welding, may be easily controlled within broad limits. Practically, the proportion of the parent metal γ may be varied from 10 to 60 per cent. Using this factor, it is possible to obtain a weld metal of the desired composition by: (1) employing medium-alloy low-carbon electrode wire and welding conditions under which the proportion of the parent metal in the weld is reduced (low penetration) or by (2) employing low-alloy electrode wire and welding conditions under which the proportion of the parent metal in the weld is increased (deep penetration).

In the first case, as few electrodes as possible and direct current are used.

Welds with a low proportion of parent metal have a relatively low carbon content. Therefore, the hardening procedures adopted for the parent metal do not ensure a complete recrystallisation of the weld metal and optimal mechanical properties.

As has been noted, welds with poorly melted edges show a tendency to tears in the fusion zone. From the foregoing it may be concluded

Table 64

Wire grade	Metal	Share of parent metal, per cent	Chemical composition of wire and weld metal, per cent								
			C	Mn	Si	Cr	Ni	Mo	Ti	S	P
Св-10ГС	Wire	—	max 0.12	1.5-1.9	max 0.03	max 0.02	max 0.3	—	—	max 0.04	max 0.04
	Weld	50	0.19	1.03	0.2	1.95	0.55	—	—	0.004	0.021
ЭИ581	Wire	—	0.08-0.14	1.0-1.3	0.4-0.7	max 0.3	max 0.3	0.2-0.4	0.05-0.12	max 0.03	max 0.03
	Weld	56	0.21	0.82	0.34	1.92	0.66	unknown	unknown	0.004	0.021
ЭИ681	Wire	—	max 0.15	1.6-1.9	max 0.12	1.2-1.5	—	—	—	max 0.03	max 0.03
	Weld	50	0.20	1.10	0.20	2.26	0.77	—	—	0.04	0.021
ЭИ616	Wire	—	max 0.14	1.0-1.3	0.4-0.7	0.4-0.7	1.5-2.0	0.2-0.3	0.1	max 0.03	max 0.03
	Weld	60	0.21	0.76	0.31	2.10	1.3	0.31	unknown	0.016	0.019

that it is not advisable to employ medium-alloy wire and welding conditions resulting in minimum penetration.

Another way of alloying the metal of electric slag welds involves low-alloy wire and considerable penetration. This is a better method, as it ensures higher production rates and welding conditions based on alternating current, and more reliable at the shop. In addition, the wire contains less alloying elements and is therefore cheaper.

If the edges are to be penetrated more deeply, the number of electrodes and welding voltage should be increased, the speed of weaving motion and the dry length of the electrode decreased, etc.

The best mechanical properties of the weld metal subjected to hardening and tempering are obtained when the parent metal accounts for 50 to 60 per cent of the weld metal*.

Naturally, the workpieces heat-treated (hardened and tempered to sorbite) upon electric slag welding should be also heat-treated prior to welding, the heat treatment being determined by the requirements of forging or rolling.

Medium-alloy steels are electric slag welded with wire electrodes whose composition is tabulated in Table 64. This table also gives the chemical analyses of the welds made in steel 25X3HM plate 100 mm thick, and containing a large proportion of the parent metal. The welds were made with AH-8 flux, two oscillating wire electrodes, using 450 to 500 a at 38 to 44 v, and maintaining a welding speed of 40 m/hr.

According to Table 64, the chemical analyses of the welds depend mainly on the composition of the electrode wire and proportion of the parent metal (when welding proceeds steadily) and less on the exchange reactions between slag and metal.

For medium-alloy steels use may be made of the fluxes that are employed for common steels, such as the AH-8, a widely employed flux developed by the Electric Welding Institute.

Table 65 presents the mechanical properties of welds made with the suggested wire grades in the 25X3HM steel after hardening and tempering. It should be noted that an increase in the proportion of the parent metal above 50 or 60 per cent does not improve the mechanical properties of a weld.

For the welds made by the electric slag process in medium-alloy heat-treatable steels to have high mechanical properties without post-welding hardening and tempering, use should be made of austenitic or medium-alloy wires, meanwhile limiting the proportion of parent metal in the weld. In the case of austenitic wire, an increase in the proportion of parent metal dilutes the weld with iron and impairs its mechanical properties. In the case of medium-alloy wire an increase in the proportion of parent metal increases the percentage

* These data relate to a wire grade of low-alloy steel.

Table 65

Steel grade	Wire grade	Share of parent metal, per cent	Mechanical properties of weld metal				
			Yield point, kg sq mm	Ultimate strength, kg sq mm	Elongation, per cent $l=5D$	Reduction of area, per cent	Impact toughness, kgm sq cm at +20 °C
25Х3НМ	Св-10Г2	60	41.1-43.5 / 42.6	58.4-59.8 / 59.1	28.3-31.0 / 29.4	71.6-71.6 / 71.6	18.1-18.7 / 18.3
	ЭИ581	56	50.6-57.2 / 54.7	70.6-72.5 / 71.2	20.0-22.3 / 21.0	64.0-66.0 / 65.5	9.75-12.0 / 11.1
	ЭИ681	50	55.5-57.1 / 56.2	69.2-70.7 / 69.7	20.0-22.3 / 21.2	66.0-68.7 / 67.3	17.0-23.4 / 21.4
	ЭИ616	60	57.6-62.2 / 64.6	72.5-76.7 / 74.2	23.3-24.7 / 24.0	66.0-69.8 / 68.8	14.7-16.0 / 15.3

of carbon and alloying elements in the weld, thus impairing its ductility.

Welds in medium-alloy steels that have a large proportion of parent metal and are not heat-treated show an increased strength, and a reduced ductility and, especially, toughness. The mechanical properties of welds made with austenitic wire and with a small proportion of parent metal are an exception. These welds show a high toughness and ductility at normal and low temperatures and a relatively low strength characteristic of austenitic welds (yield point, about 30 kg/sq mm, ultimate strength, about 50 kg/sq mm).

Low carbon non-austenitic welds have an increased toughness and ductility, when the proportion of parent metal in the weld is limited. Ductility is appreciably improved and strength is proportionally decreased by high temper. Toughness is improved insignificantly, especially at low temperatures.

As has been noted, electric slag welds in medium-alloy steels tend to develop crystallisation cracks, especially in the case of deep penetration, as it increases the percentage of alloying elements and carbon in the weld metal.

Should such cracks appear, it is advisable to limit somewhat the proportion of parent metal and to vary the welding conditions so as to increase the aspect ratio of the weld pool. The welding conditions for medium-alloy steels differ little from those for plain carbon steels.

In some cases workpieces of medium-alloy steels cannot be hardened upon welding for various reasons: the absence of furnaces or quenching baths, the large size of workpieces, etc. The hardening of bulky workpieces may lead to cracks in the parent metal due to ununiform heating and cooling. This is why it is sometimes advisable to resort to three-pass electric slag welding, as the hardening of the workpiece can be then dispensed with.

Three-pass welding consists in that a layer of metal is deposited on the edges prior to welding, and the parent metal is fully heat-treated.

The thickness of the deposited metal is so chosen that in the subsequent passes the superheated area in the near-weld zone will shift to the deposited metal, and the remaining portion of the near-weld zone will be outside the deposited metal to refine the coarse grains formed in the parent metal during the first pass. In this way, the superheated area in the parent metal will be eliminated in the process of welding, and the post-welding heat treatment will be limited to stress relieving and to eliminating unbalanced hard areas, should there be any.

The advantages of three-pass welding are evident from the macro- and micrographs in Fig. 198. To make these advantages more noticeable, the weld was made in Grade 35 medium carbon steel. One edge had been faced with a layer of metal 12 to 15 mm thick, while

the other edge had not been faced. As a result, the unfaced edge showed usual structures with a superheated area in the near-weld zone, while the faced edge had an improved structure characteristic of three-pass welding. Both in welding and hard-facing use was made of Св-10Г2 wire and АНФ-1 flux to reduce edge penetration. The weld was made with two electrodes, a welding current of

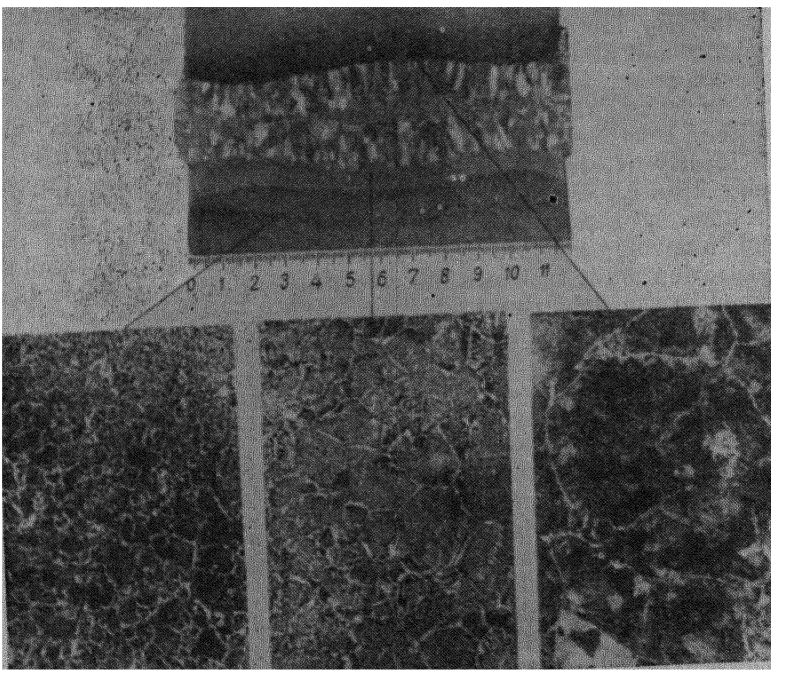

Fig. 198. Macro- and micrographs of welded joints made by one- and multipass electric slag welding (magnification ×70).

600 a, a welding voltage of 26 v, a weaving motion speed of 40 m/hr, a slag pool 25 mm deep, and with a joint gap of 20 mm.

From Fig. 198 it will be seen that three-pass welding completely eliminates coarse grains in the near-weld zone of the parent metal. When tempered, the metal in the superheated area of the near-weld zone in steel 30Х2Н2М welded by the three-pass technique has mechanical properties comparable with those of the parent metal. The toughness as measured in different areas of the near-weld zone at —70° was as follows *:

* The minimum and maximum values of toughness are given in the numerator, while the denominator is the average toughness for 3 to 5 test specimens.

(a) $\frac{17.4\text{-}20.7}{18.8}$ kgm/sq cm in the coarse-grained area;

(b) $\frac{16.5\text{-}20.0}{18.5}$ kgm/sq cm in the middle areas;

(c) $\frac{12.1\text{-}17.1}{13.1}$ kgm/sq cm in the end area.

If the weld made by the three-pass technique is to be sound the properties of the facing metal should remain sufficiently high after the main weld is made. For this reason, the edges should be built up with austenitic wire. Naturally, the main weld will have to be made with austenitic wire as well. In this case, as has been noted elsewhere, the welded joint will not be of full strength, as the austenitic metal of the built-up metal and weld will have lower strength.

It should be borne in mind that when medium-alloy steel fuses with austenitic steel, a streak of metal of intermediate composition is formed along the line of fusion. Given unfavourable welding and heat-treatment conditions, this streak will show a tendency to embrittlement. These drawbacks may be prevented by avoiding austenitic wire with an increased manganese content and heat treatment at the temperatures of temper brittleness.

It should be stressed that the deposited metal is less subjected to superheating than the rolled parent metal. From Fig. 198 it can be seen that in the superheated area of the deposited metal the initial columnar structure is completely destroyed, and this area has a considerably finer grain than the superheated area in the parent metal *. The grain size in the deposited and parent metal is valued at 1-2 and 0-1 respectively. The coarse-grained area in the parent metal is 3 mm wide, and in the deposited metal half this width, or nearly as much as in the near-weld zone of downhand arc welds.

The toughness of specimens notched in the coarse-grained area was 1.5 to 2 times greater for the deposited metal than for the parent metal. The grain refinement and the increase in the toughness of the deposited metal should be attributed to both the lesser tendency of cast metal to superheating and the lower carbon content in the deposited metal. It is not unlikely that the alloying and modification of the deposited metal will further improve its structure and properties in the superheated area.

What is actually a modified three-pass electric slag process involves the depositing of metal on to the edges in two passes. In this way the properties of the near-weld zone in the parent metal may be restored without post-welding annealing. By this method, the component parts of a weldment are annealed after the two layers of metal are deposited on the edges. The coarse-grained area in the

* When comparing the structures along the line of fusion in a butt weld, it should be realised that the two metals differ both in structure (rolled and cast respectively) and in chemical composition (Grade 35 and Grade 10Г2).

Table 66

Steel grade	Wire grade	Share of parent metal in weld, per cent	Coupon from	Mechanical properties				
				Yield point, kg/sq mm	Ultimate strength, kg/sq mm	Elongation, per cent $l=5D$	Reduction of area, per cent	Impact toughness, kgm/sq cm at +20°C
25Х3НМ	ЭИ616	60		56.9-62.0 / 60.0	68.9-73.5 / 71.7	19.3-20.7 / 20.0	64.8-67.9 / 66.1	13.3-15.8 / 14.4
			Weld-affected region (coarse-grained area)	—	—	—	—	4.6-12.3 / 7.9
30ХГСА	ЭИ616	—	Weld metal	85.0-92.0 / 87.3	97.3-104.4 / 99.3	11.7-12.0 / 11.9	30.6-38.0 / 33.3	4.4
			Weld-affected region	92.0-92.0 / 92.0	103.1-104.5 / 104.0	13.3-16.7 / 15.0	43.5-43.5 / 43.5	2.25-3.5 / 2.9
			Parent metal	84.7-88.4 / 85.9	103.2-104.0 / 103.6	15.0-15.7 / 15.5	36 0-43.5 / 41.0	—
38ХА	ЭИ616	—	Weld metal	84.8-86.6 / 85.4	94.0-99.6 / 97.0	15.7-17.3 / 16.8	55.6-55.6 / 55.6	5.4-6.25 / 6.0
			Weld-affected region	84.8-84.8 / 84.8	97.6-98.2 / 97.9	15.3-15.6 / 15.4	55.6-55.6 / 55.6	—
			Parent metal	84.8-99.0 / 91.0	102.3-110.2 / 106.2	13.3-16.7 / 14.6	51.1-55.6 / 54.5	8.2-7.9 / 8.0

parent metal is eliminated by the self-heat treatment that takes place during the first two passes. It should be noted that three-pass welding and its modification reduce the production rate of welding. Besides, welding stresses remain in the finished weldment. The magnitude of welding stresses has to be determined and the method for their relief has to be chosen in each particular case.

Sometimes welded structures have to operate under insignificant dynamic loads but at elevated temperatures (of the order of 400 to 500°C). As will be recalled, coarse-grained metal stands up to such conditions better than fine-grained metal. For these applications, use may be made of medium-alloy steels welded by the electric slag process and subjected to stress-relieving alone. The mechanical properties of the typical areas of such welds made with ЭИ616 wire in steel 25Х3НА after stress-relieving are illustrated in Table 66.

Here are a few examples of electric slag welds in medium-alloy steels.

Electric Slag Welding of Steels 25X3HM, 35XH3M and 30X2H2M

Typical welding conditions for steel plate 100 mm thick are as follows:

Welding current	450-500 a
Feed speed of 3 mm wire	200 m/hr
Welding voltage	40-42 v a. c.
Speed of weaving motion	40 m/hr
Depth of slag pool	50-60 mm
Joint gap	26-28 mm
Number of electrodes	2
Electrode dwell at moulding shoe	3-4 sec
Least distance between electrode and moulding shoe	7-10 mm
Dry length of electrode	50-60 mm
Electrode spacing	35-40 mm

The welding voltage and electrode spacing have to be increased with increasing thickness. The grade of wire should be chosen so as to meet the requirements for the mechanical properties of the weld metal. Sufficiently high mechanical properties may be obtained with Св-10Г2 and ЭИ681 wire. If the weld metal has to have increased strength and ductility, use should be made of special wire grades ЭИ616 and ЭИ581.

Figs. 199 and 200, respectively, show typical macrographs of a weld without heat treatment and after hardening followed by tempering. The heat treatment has fully destroyed columnar crystals and eliminated the near-weld zone which etches readily in the macrosections without heat treatment.

After heat treatment, the weld has a sorbitic-pearlite structure with a hardness of 200-210 H_B (Fig. 201) while the near-weld zone is sorbite with a hardness of 216-220 H_B (Fig. 202). The fusion zone is defined poorly in the micrographs.

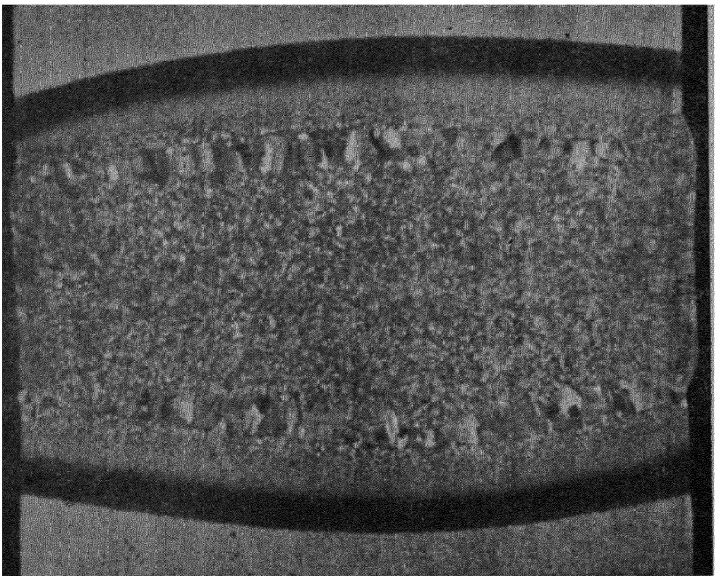

Fig. 199. Macrograph of a welded joint in Cr-Ni-Mo steel after welding.

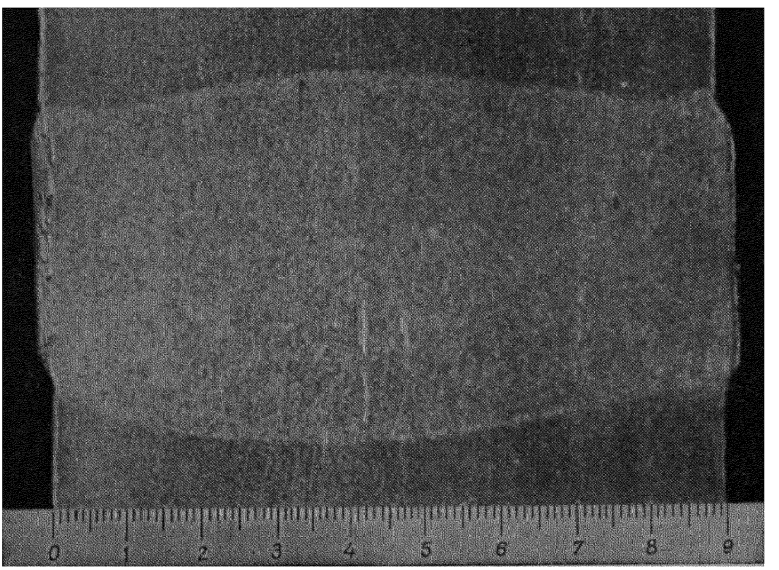

Fig. 200. Macrograph of a welded joint in Cr-Ni-Mo steel after hardening and tempering.

The welding of circular joints in these grades of steel has some peculiarities. In thick-walled cylinders appreciable internal stresses set in because of the rigidity of the workpiece and as a result of the structural transformations in the near-weld zone. These stresses, coupled with brittle superheated structures in the near-weld zone, may result in brittle cracks of considerable length. These cracks usually appear after the workpiece has cooled.

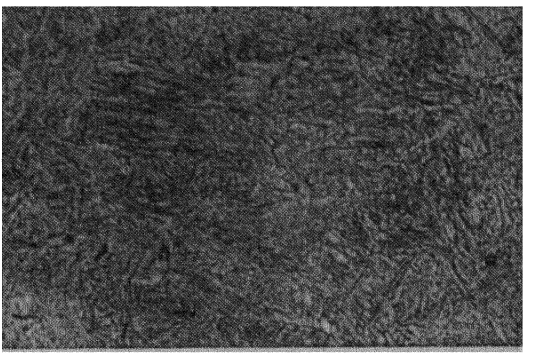

Fig. 201. Micrograph of electric slag weld made in steel 25 ×3HM after hardening and tempering (magnification ×300).

These cracks may be prevented by (a) preheating the final length of the circular seam to 150 or 200°; or (b) preheating the edges all along the joint and reducing the rate of cooling after welding in the case of an increased carbon content.

A more efficient method of crack prevention is to place the workpiece into a furnace immediately upon welding.

Fig. 202. Micrograph of superheated area in near-weld zone in steel 25X3HM after hardening and tempering (magnification ×300).

Electric Slag Welding of Steels 30ХГСА and 38ХА. These are structural steels of medium weldability. When heat-treated (hardening and tempering), these steels have high mechanical properties and go into critical welded structures. Downhand arc welds in these steels are sound if special measures are taken to prevent cracks in the weld metal and the near-weld zone (preheating, use of filler wire, multipass welding, etc.). For all the complexity of arc welding procedures they fail to produce full-strength welds in these steels. Under the existing regulations, the mechanical properties of the weld metal (after hardening and tempering) should be as follows:

Yield point	min 70 kg/sq mm
Ultimate strength	min 90 kg/sq mm
Elongation	min 12 per cent

Sound welds in these steels with the desired mechanical properties of the weld metal can be made successfully and simply by electric slag welding.

The suggested welding conditions for the electric slag process are as follows:

Current	550-600 a
Welding voltage	32-34 v d.c.
Polarity	reversed
Electrode diameter	3 mm
Depth of slag pool	45-60 mm
Dry length of electrode	45-50 mm
Joint gap	20-22 mm
Flux	АН-22 or ФЦ-7
Wire grade	Э1616
Welding speed	3.2 m/hr
Plate thickness	30 mm

Welds were made with one stationary electrode positioned in the centre of the groove. When the above-stated conditions were maintained within reasonable limits, the welding proceeded steadily, and the edges were penetrated uniformly (3 or 4 mm on each side).

The weld was shaped by a water-cooled copper moulding shoe on the face side and with a water-cooled copper backing strip on the reverse side.

When quenched in oil from 880°, tempered at 550° and cooled in the air, the weld and the near-weld zone had mechanical properties comparable to those of the parent metal (Table 66).

The microstructure of welded joints (troosto-sorbite) after heat treatment was uniform and practically the same in both the weld and parent metal.

Electric Slag Welding of Steel 15ХМА. When selecting welding conditions for this steel, the objective was to simplify the welding procedure and to obtain high-quality welds without any defects both in the near-weld zone and the weld metal in plates of a relatively small thickness (40 mm).

The welding technique and procedure were similar to those for the 30ХГСА steel given above:

Current	400-500 a
Welding voltage	38-40 v d.c.
Polarity	reversed
Speed of wire feed	216 m/hr
Joint gap	22 mm
Depth of slag pool	35-45 mm
Dry length of electrode	80-100 mm
Flux	ТК3-Д5П and ФЦ-7

As the weld and parent metal were similar in chemical composition, the wire was Grade Св-12ХМА to ГОСТ 2246-54, 3 mm dia. With the welding conditions maintained as advised above, the welding speed was 1.7 m/hr, or 5 to 7 times the speed of manual multipass welding. The welding had to be followed by normalising at 910-930°; cooling in the air to 400°; tempering at 640-650°; cooling in a furnace at the rate of 100° per hour to 450°; and cooling in the air.

After heat treatment, the ultimate strength of the welded joint was 47.2 kg/sq mm; the weld metal showed the following mechanical properties at +20°: yield point, 30.8 kg/sq mm; ultimate strength, 46.8 kg/sq mm; elongation, 29.8 per cent in $l=5D$, and reduction of area, 65.9 per cent. At 500°, the yield point was 24.8 kg/sq mm and the ultimate strength, 42.9 kg/sq mm.

Electric Slag Welding of Steel 16ГНМ. Steel 16ГНМ is a manganese-nickel-molybdenum low-alloy steel employed in boiler making. The steel should be normalised and tempered so as to obtain optimum mechanical properties.

A steel 16ГНМ plate 135 mm thick was slag-welded using ЭИ569 wire, 3 mm dia, ФЦ-7 flux, a single oscillating electrode, and 500 to 550 a at 50 to 55 v. The chemical analyses of the parent, electrode and weld metal are given in Table 67.

Table 67

Metal	Chemical analysis, per cent								
	C	Si	Mn	Ni	Mo	Cr	S	P	Cu
16ГНМ steel	0.18	0.20	0.77	1.25	0.44	0.18	0.026	0.026	0.10
ЭИ569 wire	0.09	0.23	0.64	1.15	0.42	none	0.012	0.015	none
Weld metal	0.14	0.43	0.69	1.25	0.45	none	0.015	0.030	none

The welded specimens were tested after tempering (heated to 650°C, held for 3 hrs and cooled in the furnace) and after normalising followed by tempering (heated to 930°, held for 30-45 min, and cooled at the rate of 230-270° per hour).

The averaged mechanical properties of the weld metal and welded joints are given in Table 68.

The tests were made at room temperature, at + 320° and at +370°C. As Table 68 shows, the mechanical properties of the weld metal are superior to those specified by the relevant standard even after tempering

5. Austenitic Steels and Heat-resistant Alloys

As has been noted elsewhere, electric slag welding yields the best results on metal thicknesses upwards of 40 or 50 mm. However, austenitic steels and heat-resistant alloys of this thickness were

Table 68

Condition of specimen	Temperature of test, °C	Impact toughness, kgm/sq cm			Yield point, kg/sq mm	Ultimate strength of weld metal, kg/sq mm	Elongation, per cent	Reduction of area, per cent	Bending angle, deg	Ultimate strength of welded joint, kg/sq mm
		middle of weld	line of fusion	area of coarse grain						
Tempering from 650°	20	12.8	13.6	13.3	40	56	24	67	180	56.2
	320	—	—	—	36	57	21	50	—	—
	370	9.5	12.5	12.6	—	—	—	—	—	—
Normalising from 915° followed by tempering from 650°	20	17.5	14.7	23.3	33	51	28	67	180	49.1
	370	17.0	14.3	17.8	—	46.7	23.4	65.2	—	—
As specified by standard for weld metal	20	7.0	—	—	32 or more	48	18	45	120	—
	370	—	—	—	26 or more	—	—	—	—	—

Table 69

Steel or alloy grade	Chemical analysis, per cent												
	C	Si	Mn	Cr	Ni	Fe	Ti	Al	Mo	Nb	V	S max	P max
1X18H9T	max 0.12	max 0.8	max 2.0	17.0-20.0	8.0-11.0	Base	5 (0.03 C) down to 0.8	—	—	—	—	0.030	0.035
ЭИ481	0.34-0.40	0.3-0.8	7.5-9.5	11.5-13.5	7.0-9.0	Base	—	—	1.1-1.4	0.25-0.45	1.3-1.6	0.030	0.035
ЭИ435	max 0.12	max 0.8	max 0.7	19.0-22.0	Base		max 1.0	0.15-0.35	max 0.15	—	—	—	0.020	0.030
ЭИ437	max 0.06	max 0.65	max 0.35	19.0-22.0	Base		max 1.0	2.2-2.7	0.50-0.95	—	—	—	0.007	0.015

used but seldom until quite recently. The rapid progress made in power engineering (especially in nuclear power engineering), jet propulsion, rocketry, aviation and other industries has necessitated the use of acid-proof, stainless, heat-resistant steels and alloys of increasingly greater thicknesses. Today, heat-resistant materials are often welded in thicknesses of 100, 120 mm and more. They are made into flanges, rings, and other parts and units. In such jobs the welds are of short length and the workpieces are made of square or rectangular bars. Long seams are rare; they may be encountered only in thick-walled barrels, heads, tube sheets, etc.

Short seams are made best with plate electrodes, as the welding procedure may be simplified to the utmost and the danger of defects in welded joints may be reduced to a minimum.

As will be recalled, the wire electrode employed in electric slag welding is a sized wire 3 to 4 mm in dia. The manufacture of this wire from existing heat-resistant materials, so many of which have a poor workability, is a difficult task. On the other hand, no particular difficulties arise in the manufacture of plate electrodes.

However, this is not the only reason why a plate electrode should be preferred to a wire electrode when welding austenitic steels and heat-resistant alloys by the electric slag process. Equally important is also the fact that with a plate electrode a reliable and simple current path may be established and the electrode may be appropriately positioned in the groove.

On the other hand, all this is difficult to accomplish when welding with austenitic or Ni-Cr wire (i.e., wire made from a heat-resistant alloy of the X20H80 type). The point is that this sort of wire offers an increased resistance to the passage of electric current. The higher the resistance of the wire, the more reliable the current path to the electrode must be, and the dry length of the electrode has to be reduced in proportion. By way of example, the dry length of an austenitic electrode in submerged arc welding in the downhand position should not exceed 20 to 25 mm for a diameter of 2 mm and 30 to 35 mm for a diameter of 3 mm. Otherwise, the stability of the arc is sharply upset, the shape of the weld is impaired, and penetration of the edges is anything but uniform.

In electric slag welding, such a negligible dry length of electrode is unacceptable, as the current-conducting electrode guides will then have to stand up to the heat radiated by the slag pool. For this reason, the dry length of austenitic electrodes has to be 50 or 60 mm and sometimes even 80 mm. Under such conditions, even a short interruption of contact in the electrode guide due to dirt, oxide film or grease on the surface of the wire, may upset the stability of electric slag welding. Besides, the ununiform heating of the exposed length of electrode may result in the vibration of the electrode tip; the edges will be penetrated unsymmetrically and unevenly, and there may be poor fusion at the edges.

The vibration of the electrode in the groove is particularly noticeable when use is made of stiff, cold-hardened wire. This sort of wire must not be used at all when the electrode has to be bent (as

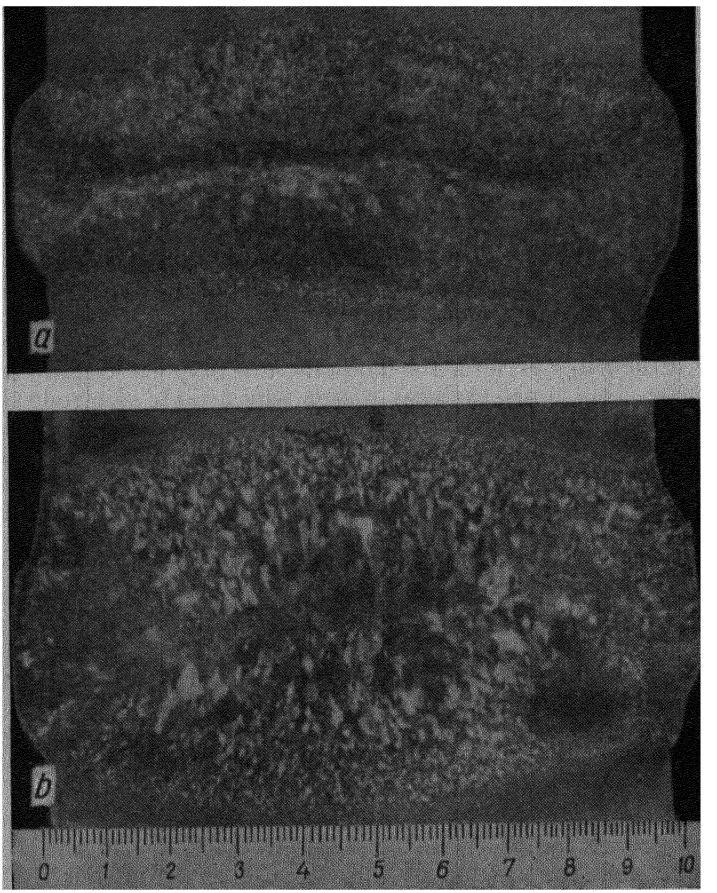

Fig. 203. Macrographs taken across butt welds made by electric slag welding:
a — steel 1Х18Н9Т, 100 mm thick; *b* — steel ЭИ481, 100 mm thick.

in the A-306 welding set). A better choice is annealed wire with a bright pickled surface, or wire with a thoroughly sand-blasted surface.

At the present time, the electric slag process can be successfully applied to austenitic steels of the 18/8 type (1Х18Н9Т, ОХ18Н9, etc.), heat-resistant steels of the Х12Н8Г8 type (ЭИ481), etc., as

well as heat-resistant nickel-based alloys of the X20H80T and X20H80T3 types (ЭИ435 and ЭИ437), etc. The chemical analysis of these metals is given in Table 69, and the macrographs in Fig. 203.

As distinct from arc welding, where use has to be made of direct current of reversed polarity, the electric slag process, when applied to the above grades of steel, depends on alternating current. The welding procedures for austenitic steels and nickel-based alloys are conditioned by the physical and chemical properties of the steels to be welded. These properties are low thermal conductivity, high thermal coefficient of expansion, susceptibility to hot cracks in the weld and parent metal near the line of fusion, the likelihood of the solid solution in the near-weld zone segregating under the action of the thermal cycle, and the presence of alloying elements with a pronounced affinity for oxygen (such as aluminium, titanium, zirconium, boron, etc.).

The low thermal conductivity and increased heating of the edges in austenitic steels and chromium-nickel alloys call for wider moulding shoes and backing strips than plain carbon or low-alloy steels do.

As austenitic welds contract appreciably in solidifying, the parts to be welded (sheet, plate, boiler shells, etc.) have to be lined up with a tapering gap, and the difference in the gap at the top and bottom is greater than in the case of non-alloy steels. Short seams, however, such as in bars 150 mm square in cross section, may be assembled with a uniform gap (Fig. 204).

To avoid hot cracks, the welding conditions should be chosen so that the aspect ratio of the weld is the highest, i.e., the depth of the metal pool is the least for a given width of penetration.

In order that the welding pool take up as much as possible of those easily oxidised elements, which impart their special properties to austenitic steels and nickel alloys, these metals should be welded with fluorinated fluxes.

These fluxes, which are based on calcium fluoride, have valuable metallurgical properties. In melting, they form practically non-oxidising slags which have a fairly high electrical conductivity, and thus electric slag welding may be performed at relatively low voltages (20 to 25 v). A valuable property of these slags is that they eagerly remove sulphur from the weld metal.

Grade АНФ-1 flux made of commercially pure calcium fluoride or fluoride concentrate gives a very short slag in melting, which has a relatively high point of solidification (about 1,500°). Some austenitic steels and nickel alloys have a considerably lower melting point. When these metals are welded with АНФ-1 flux, poor fusion is not unlikely (Fig. 205).

A better choice for steels and alloys with a relatively low melting point (compared with plain carbon steel) is the АНФ-7 (ЭС-5) flux consisting of 80 per cent CaF_2 and 20 per cent CaO, which is very

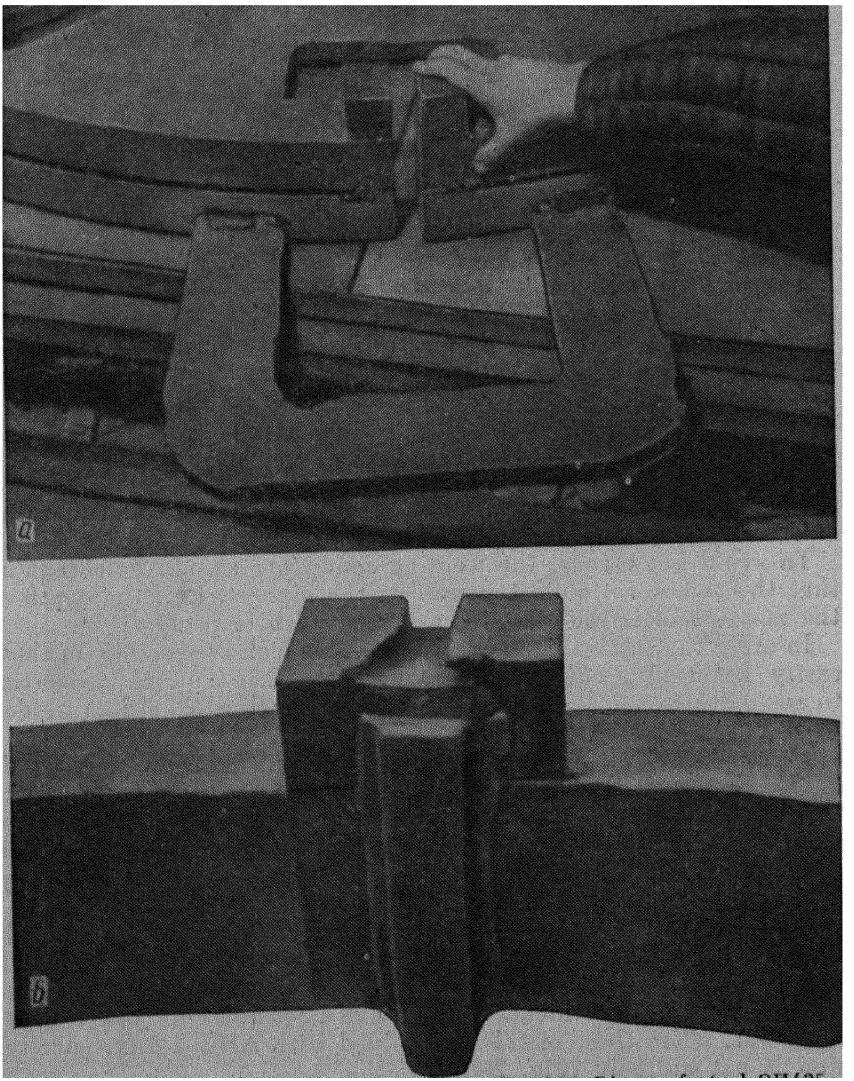

Fig. 204. Rings of steel ЭИ435
а — fit-up for welding;

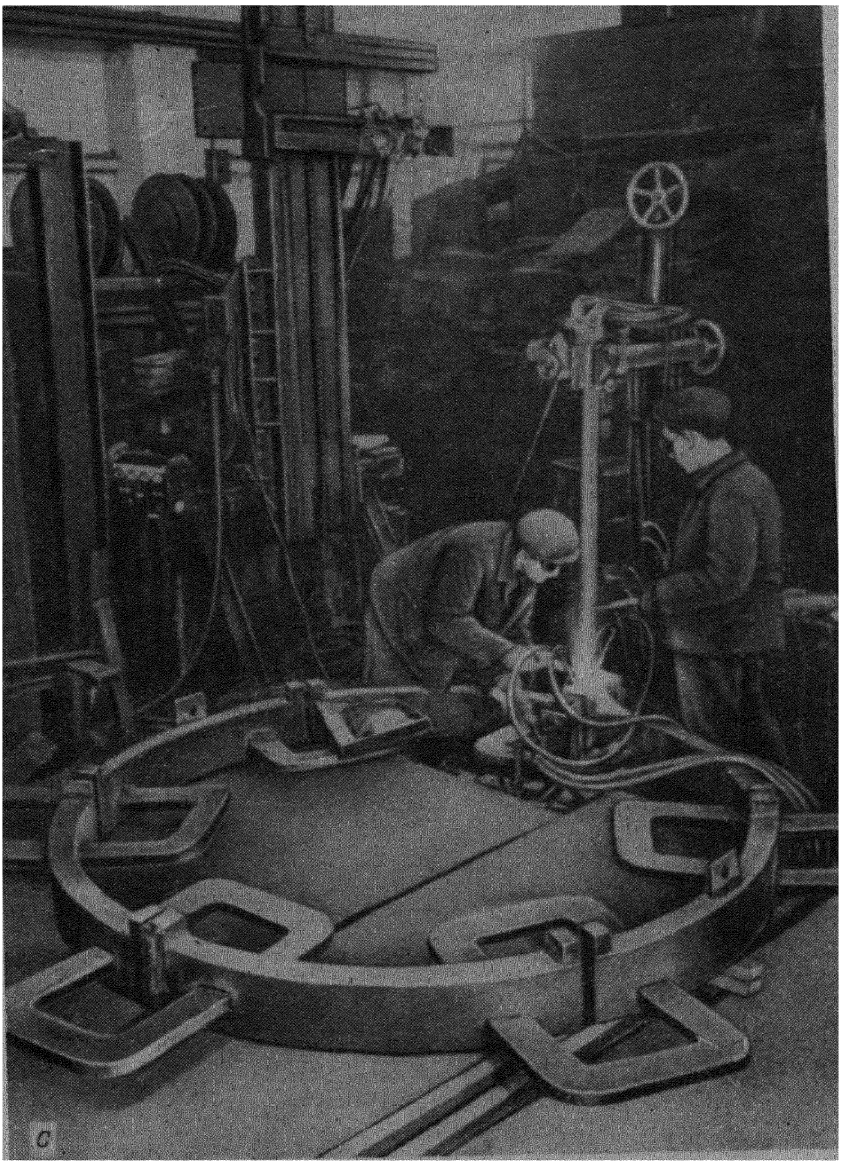

welded by electric slag process:
b — weld; *c* — welding.

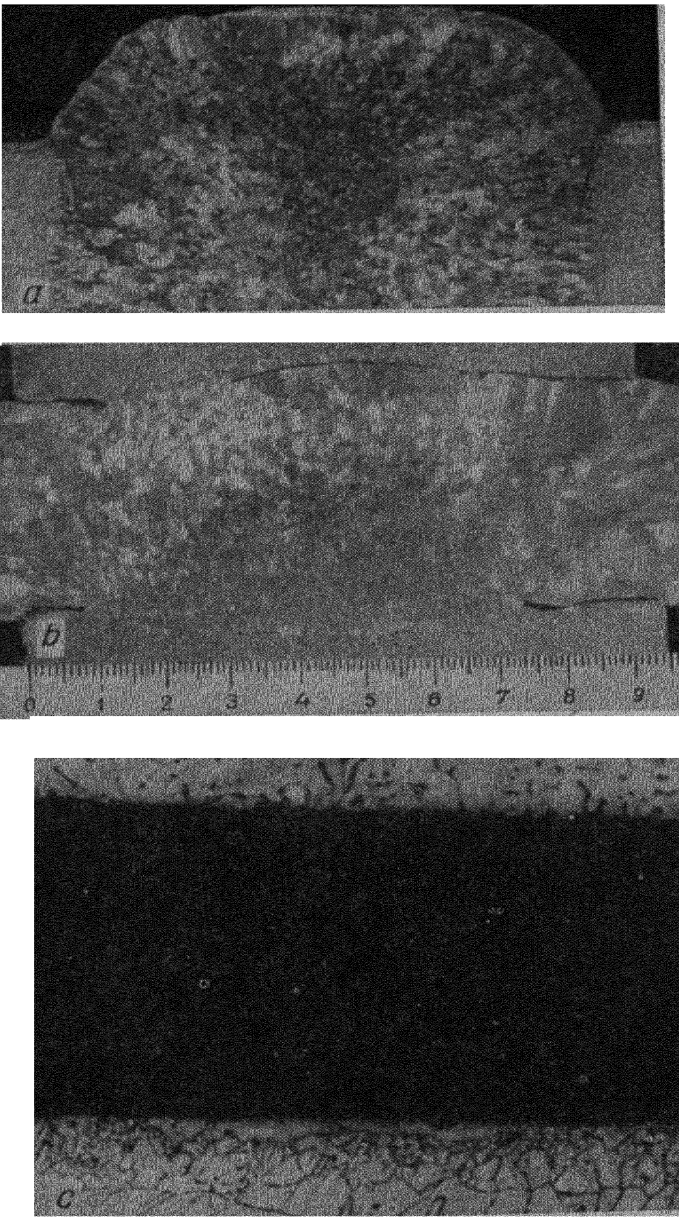

Fig. 205. Poor fusion in electric slag welding. **a** — steel ЭИ654; *b* — alloy ЭИ437Б, *c* — steel 1Х18Н9Т (magnification ×150).

close to the eutectic in the CaF_2-CaO system. Prior to welding, the flux should be roasted so as to avoid gas holes (Fig. 206).

The welding conditions for austenitic steels and heat-resistant nickel alloys welded with a plate electrode are given in Table 70.

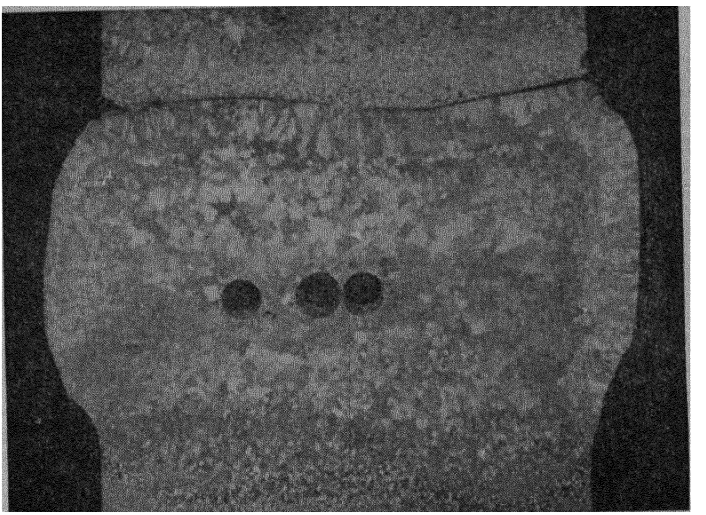

Fig. 206. Gas pockets in electric slag weld made with damp flux; poor fusion can be seen on one side.

The plate electrode is of the same composition as the metal to be welded.

Table 70

Steel or alloy grade	Weld section, mm	Electrode section, mm	Flux grade	Speed of wire feed, m hr	Welding current, a	Welding voltage, v	Joint gap, mm
1Х18Н9Т	50×50	6×50	АНФ-1	3.6	900	24-26	25
1Х18Н9Т	100×100	10×100	АНФ-1	2.4	1,200	24-26	30
ЭИ654	100×100	10×100	АНФ-7 (ЭС-5)	3.1	1,500	24-26	30
ЭИ481	100×100	10×100	АНФ-1	2.9	1,800	23-24	30-35
ЭИ435	125×125	10×125	АНФ-1	2.4	1,800	23-24	30
ЭИ437Б	100×100	10×100	АНФ-7 (ЭС-5)	2.9	1,800	23-25	30-33

The weld is started in a water-cooled copper pocket so as to obtain ample penetration at the beginning of the weld. Instead of a pocket,

use may be made of a starting tab. The weld should be terminated in a finishing tab, as shrinkage cavities and cracks may develop at the end of the weld.

The depth of the slag pool in welding with a plate electrode should not exceed 15 or 20 mm. If the depth is greater, poor penetration may occur, while with a shallow slag pool the welding process becomes unsteady. The slag pool should be started with AH-25 or self-fusing Cl fluxes, which both have a high electrical conductivity.

Table 71 illustrates the mechanical properties of welded joints made in Grade 1X18H9T acid-proof austenitic steel 100 to 125 mm thick. As will be seen, the electric slag process produces full-strength joints. Moreover, they show the required resistance to intercrystalline corrosion. This should be attributed to the use of plate electrodes made of low-carbon steel 1X18H9T with an increased titanium content.

The weld metal has a twin austenite plus ferrite structure even when welded with plate electrodes of purely austenitic 1X18H9T steel. This is due to the liquation of dendrites, so characteristic of primary crystallisation in the weld pool. Thus, a weld with a twin structure and 5 per cent of delta-iron was obtained in steel 1X18H9T (0.10 per cent C; 0.74 per cent Si; 0.60 per cent Mn; 17.8 per cent Cr; 10.1 per cent Ni; 0.61 per cent Ti) welded with a plate electrode of practically the same composition (both the steel and electrode as supplied had a single phase austenitic structure).

Electric slag welding gives rise to an appreciable grain growth in steel 1X18H9T. The slowed-down cooling of the welded joint may bring about the decomposition of austenite in the near-weld zone and a tendency to corrosion. If a welded joint is to have a high resistance to intercrystalline corrosion, it should be annealed for stabilisation (i. e., heated for 2 or 3 hours at 850 or 900° and either cooled in the air or quenched).

The intensive growth of grains in the near-weld zone, especially when accompanied by the appearance of high-temperature ferrite, may result in a lower impact toughness. However, the drop in toughness is insignificant; its lowest limit is about 8 or 9 kgm/sq cm.

When tested for destruction, welded joints without heat treatment fail in the parent metal, far away from the weld. After tempering at 650° the failure occurs in the superheated area of the near-weld zone.

The mechanical properties of welded joints in high-strength austenitic steel and heat-resistant steel ЭИ481 are illustrated in Table 71. It is advisable to weld high-strength stainless steel with АНФ-7 flux, as the use of АНФ-1 flux inevitably leads to poor fusion. This steel has an austenite plus ferrite or even a ferrite plus austenite structure. Welded joints also have a double-phase structure with rather large flakes of ferrite. This steel may also develop the sigma-phase in the weld and near-weld zone with the result that the weld metal will have a relatively low impact toughness of 4 or 5 kgm/sq

cm (Fig. 207). However, the impact toughness may be doubled by heating at 1,100° for an hour and quenching in water.

In steel ЭИ481 the danger of crystallisation cracks is particularly grave due to the dendritic segregation of carbon and the formation of low-melting eutectic streaks of the ledeburite type on the boundaries of columnar crystals. To avoid cracks, the joint gap should be not less than 32 or 35 mm and the welding conditions should be as advised in Table 70, so as to obtain welds with a high aspect ratio.

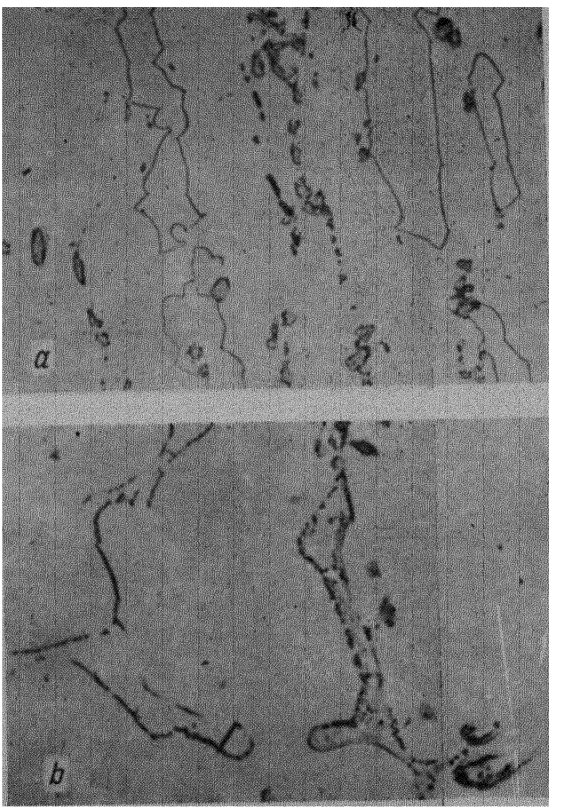

Fig. 207. Micrograph:
a — steel (austenite+ferrite) (magnification)×300, b — electric slag weld (austenite+ferrite+σ-phase) (magnification ×1000).

The mechanical properties of welded joints made in heat-resistant nickel alloys ЭИ435 and ЭИ437Б are tabulated in Table 71.

Alloy ЭИ435 welds well with АНФ-1 flux (Fig. 208). However, this grade of flux is not suitable for steel ЭИ437Б, as it gives rise to poor fusion. Instead, АНФ-7 flux should be employed. With this flux, aluminium, titanium and boron remain practically unoxidised. This is important, as even small amounts of boron make chromium-nickel-titanium-aluminium alloys of the X20H80T3 type highly heat-resistant.

On short welds, a relatively large quantity of electrode metal is spent to fill the pocket at the beginning of the weld and to terminate the weld outside the joint at the top. Austenitic steels and nickel alloys will not be flame-parted. The removal of the weld at the beginning and the end by mechanical means is also difficult. Therefore, it is advisable to make short welds in several workpieces at

a time, by stacking them one upon another. This technique appreciably reduces the amount of machining involved. After welding, the workpieces may be parted off from one another by arc-cutting or by the anode-mechanical method.

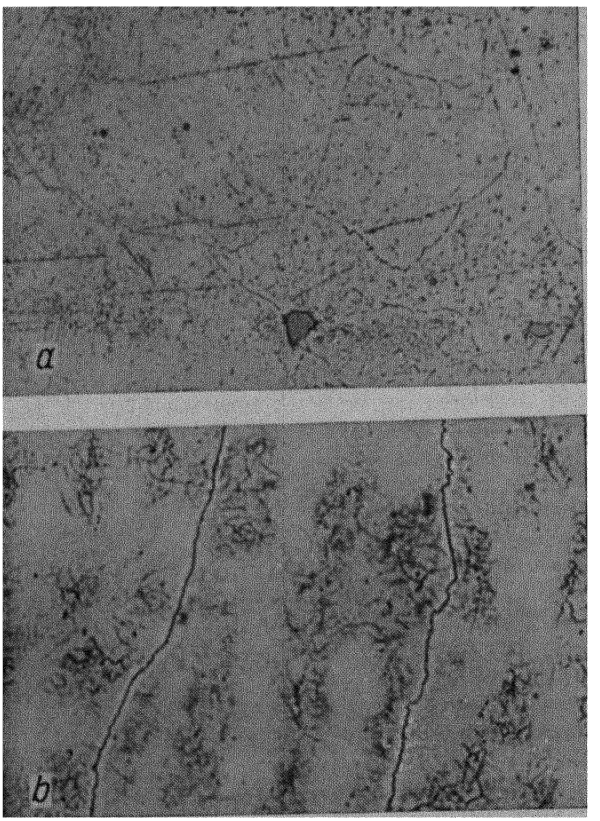

Fig. 208. Micrograph:
a — alloy ЭИ435 (magnification ×300), *b* — electric slag weld (magnification ×150).

The plate electrode employed is of a relatively large cross section. Therefore, it is heated little, though its ohmic resistance is high. In making a weld 150 mm long with a current density of 1.5 to 1.8 a/sq mm, a plate electrode 1 to 1.2 m long will heat to not higher than 80 or 100° in the space of 10 minutes.

Recently, electric slag welding has been successfully employed in the fabrication of cast-welded structures from Ni-Cr-W-Mo heat-resistant alloys of low workability. The intense heating of the edges

Table 71

Steel or alloy grade	Post-welding heat treatment	Temperature of test, °C	Weld metal					Welded joint		
			Yield point, kg/sq mm	Ultimate strength, kg/sq mm	Elongation, per cent	Reduction of area, per cent	Impact toughness, kgm/sq cm	Ultimate strength, kg/sq mm	Elongation, per cent	Failure
1Х18Н9Т	None	20	—	—	—	—	8.0-9.0	49.0	44.0	In weld
ЭИ654	None	20	36.3	70.4	29.3	16.0	4.8-5.3	—	—	—
	Hardening	20	—	—	—	—	8.0-9.0	—	—	—
ЭИ481	None	20	46.0	70.7	26.3	16.0	5.2-7.0	71.9	25.4	In weld
		700	24.4	47.4	17.9	12.9	—	—	—	—
	Hardening+ +ageing	20	61.7	89.4	11.5	9.8	2.0-2.6	84.5	15.4	In weld
		650	45.2	57.0	14.1	41.2	—	—	—	—
ЭИ437Б	None	20	37.2	68.4	41.2	27.8	21.0-23.0	67.5	44.4	In parent metal
		700	25.4	49.6	46.5	51.0	—	—	—	—
	Hardening+ +ageing	20	58.7	76.2	18.0	14.4	6.3-6.8	80.0	17.4	In parent metal
		700	50.9	67.1	17.9	24.9	—	—	—	
ЭИ435	None	20	28.8	63.8	40.5	36.3	16.0-18.8	63.6	28.0	In parent metal
		700	19.8	36.8	17.4	12.9	—	—	—	—

characteristic of electric slag welding makes it possible to weld such heat-resistant materials, which would otherwise tend to develop cracks in the near-weld zone, due to reduced ductility at 800 to 1,100°C.

The electric slag process is also applicable to composite cast-forged-welded structures, such as rotor disks of gas turbines. Incidentally, the electric slag process may come in handy when welding rims to these disks.

Circumferential butt welds on disks can be made with the disks placed vertically. Both the rim and the disk are fitted up for welding without edge preparation and with a circular gap. The fluxes used are of the fluorinated type. Welding may be performed with many electrodes; in the case of three-phase current, their number should be a multiple of 3 (6, 9, 12, etc.). The best results are obtained with three plate electrodes. It is advisable to bend the electrode to a radius equal to that of the circular butt weld. Use may also be made of an electrode in the form of a tube having the diameter of the weld.

When long welds are made by the electric slag process in austenitic steels and heat-resistant alloys, wire, rather than plate electrode, has to be used.

Some operators make short welds in 18/8 steels with wire electrodes and AH-348A flux Naturally, this flux is responsible for the burning losses of such easily oxidised elements as titanium and aluminium, and chromium. As a result, the welds have lower mechanical properties. Therefore, austenitic steels and heat-resistant alloys should be welded by the electric slag process with fluorinated fluxes, when both wire and plate electrodes are employed. This ensures the high stability of welding and the maximum recovery of alloying elements by the weld metal. By way of example, when steel 1X18H9T is welded with a wire electrode containing 0.7 per cent titanium and with a manganese-silicate flux, the amount of titanium recovered by the weld does not exceed 0.25 per cent, and the weld shows a tendency to intercrystalline corrosion. With АНФ-1 flux, the amount of titanium recovered by the weld is at least 0.5 per cent, and the weld shows a high resistance to intercrystalline corrosion.

Here are a few examples of electric slag welds made with wire electrodes in steel 1X18H9T. This typically austenitic steel is welded with АНФ-1 fluorinated flux, a 3 mm electrode wire, and alternating current.

The grade of wire electrode is chosen to meet the conditions under which the workpiece is to be used. The chemical analysis of the wire and of steel 1X18H9T are given in Table 72.

Grade Св-0X18H9 wire is used when the resistance of welded joints to intercrystalline corrosion is not essential, and weldments are intended for operation in cryogenic equipment. Grade Св-0X18H9C2 wire is employed for welds which are to withstand elevated temperatures in the absence of corrosive agents. Grades Св-1X18H9T and 0X18H9ФБС are advised for welds which should

Table 72

Wire grade	Chemical analysis, per cent									
	C max	Si	Mn	S max	P max	Cr	Ni	Ti	V	Nb
Св-0Х18Н9	0.06	0.5-1.0	1.0-2.0	0.02	0.03	18.0-20.0	8.0-10.0	None	None	None
Св-0Х18Н9С2	0.06	2.0-2.75	1.0-2.0	0.02	0.03	18.0-20.0	8.0-10.0	None	None	None
Св-1Х18Н9Т*	0.07	0.3-0.7	1.0-2.0	0.02	0.03	18.0-20.0	8.0-10.0	0.06-0.8	None	None
Св-0Х18Н9ФБС (ЭИ649)	0.07	1.3-1.8	1.0-2.0	0.02	0.03	18.0-20.0	8.0-10.0	None	1.3-1.8	1.0-1.2
Steel 1Х18Н9Т	0.12	0.8	2.0	0.03	0.035	17.0-20.0	8.0-11.0	From 5 (0.03 C**) down to 0.8	None	None

* Closer tolerances are given for carbon content (0.07 max instead of 0.10) and for titanium (0.6-0.8 instead of 0.5-0.8).

** Carbon content in steel 1Х18Н9Т.

have a high resistance to intercrystalline corrosion. The latter grade of wire imparts welded joints a higher overall resistance to corrosion.

As distinct from the welding of plain low-carbon steels with wire electrode, the welding voltage for steel 1X18H9T should be almost halved. The welding procedures for these steels do not practically differ from those described in the preceding chapters.

The welded joints made by the electric slag process (with Св-0X18H9C2 wire) in steel 1X18H9T have high mechanical properties (Table 73).

Table 73

Weld metal					Welded joint			
Yield strength, kg/sq mm	Ultimate point, kg/sq mm	Elongation, per cent	Reduction of area, per cent	Impact toughness, kgm/sq cm	Ultimate strength, kg/sq mm	Elongation, per cent, 100 mm gauge length	Failure	Bending angle, deg
25.4	69.0	60.7	41.2	18.5	58.7	60 6	In parent metal	180

In view of the development of hydraulic power engineering, it may be expected that the next few years will see the large-scale employment of electric slag welding in the fabrication of stators for powerful hydraulic turbines from chromium stainless steels 1X13 and 2X13. The peculiarities of high-chromium ferritic steels will call for special welding procedures to give sound welded joints. Of the many peculiarities mention should be made of the tendency to grain growth and the accompanying embrittlement, and the tendency of welded joints to cold cracking. It may also be expected that electric slag welding will find application in the fabrication of thick-walled vessels of composite plate, which is a plain low-carbon or low-alloy steel with a relatively thin cladding of stainless steel. As will be recalled, the clad plate used in nuclear engineering has a total thickness of 100 to 120 mm with a cladding of only 10 or 12 mm. Such plate may be welded by the electric slag process. For this purpose, the stainless steel should first be removed from the edges of the workpiece over a width somewhat greater than the depth of penetration. This is essential so that the weld metal may not be alloyed with the chromium, nickel or any other element in the cladding. After welding, the cladding should be restored by depositing a layer of stainless steel over the weld. This may be done by electric slag or arc welding in the downhand position. In the latter case, it is advisable to use a ribbon electrode.

6. Titanium

In recent years, thanks to their valuable mechanical and chemical properties, titanium and its alloys have been coming into ever wider use in many industries, Titanium has a high strength, a low specific

gravity, a high resistance to corrosion in aggressive atmospheres, and a good workability. The combination of these properties has opened up a wide field of application for titanium in the aircraft, ship-building, chemical, transport and some other industries.

Heavy sections of titanium and its alloys (over 40 mm thick) should be welded by the electric slag process, as argon-shielded arc and submerged arc welding sharply impair the mechanical properties of the metal weld and the near-weld zone. This is because a weld made in many passes is heated several times. Furthermore, arc welding is a very slow process.

At present, electric slag welding is applied to commercial titanium (Table 74) and some of its alloys.

Table 74

Alloying elements, per cent (by weight)						
W	Fe	Si	C	H_2	N_2	O_2
≤0.05	≤0.3	≤0.15	≤0.1	≤0.015	≤0.04	≤0.15

As a chemical element, titanium has some physical and chemical properties which make it difficult to weld.

At elevated temperatures and especially in the molten state, titanium shows a high affinity for oxygen, nitrogen and hydrogen. At over 600° C it absorbs these elements from the air, while in the molten state titanium reduces them from various chemical compounds. Even in small amounts, these gases sharply impair its toughness and ductility. Therefore, special measures have to be taken when welding titanium so as to shut out oxygen, nitrogen and hydrogen. The adjoining parent metal should also be protected from atmospheric gases, as it is also heated to temperatures at which titanium may absorb them. Titanium and its alloys have a high electrical resistance and a low coefficient of thermal conductivity. By way of comparison, its resistance is 5.5 times that of low-carbon steel, and its thermal conductivity only one-fourth.

When welding titanium with wire electrode 3 or 4 mm dia, the dry length should be as short as possible (15 or 20 mm), or the electrode will be overheated. Experience has shown that an overheated electrode is inevitably saturated with atmospheric gases, and the mechanical properties of the weld metal are appreciably lower.

The welding conditions in the case of titanium wire may sometimes be upset as the wire has an increased hardness and wears the current-conducting electrode guides rapidly. The use of titanium electrode wire 3 or 4 mm in diameter will be possible, if these difficulties are overcome by means of specialised equipment. It is not at all unlikely that a way out may be found through a combination of titanium wire and consumable electrode guides.

The best plan is to weld titanium with plate electrodes, as the welding conditions may be maintained constant, and the electrode is not overheated or saturated with atmospheric gases.

When titanium is being raised to elevated temperatures, its grains grow rapidly. The existing methods of heat treatment do not eliminate this shortcoming. This tendency to grain growth is particularly pronounced when titanium is flash-welded. The appreciable growth of grains in the superheated areas of the parent metal and the near-weld zone may be prevented by using low welding currents and voltages and thus limiting the size of superheated areas and the time at elevated temperatures.

The Electric Welding Institute has developed the flux AH-T2 specially for titanium. It is made up of chemically stable oxygen-free compounds having high melting and boiling points. The flux ensures steady welding, a well-shaped weld, high mechanical properties, and the absence of gas holes in the weld and the weld-affected zone.

As has been noted in Chapter III, the slag alone cannot shield the weld metal from atmospheric gases. The slag pool merely limits rather than completely eliminates interaction between the atmosphere and the metal pool. Therefore, an additional gas shielding has to be provided between the slag pool and the atmosphere. This purpose can be served by pure argon, an inert gas of high purity, which is spread over the slag pool by a tube mounted at the top of the chill, back-up strip or moulding shoe.

With flux AH-T2 and argon shielding, the weld metal does not practically differ in chemical analysis from the parent metal and electrode. By way of comparison, Table 75 gives the gas contents of the weld metal for slag welding with a water-cooled copper chill, with and without argon shielding, and also the composition of the plate electrode employed. The conditions of the experiment were the same in both cases.

Table 75

Metal	Gas content, per cent		
	O_2	N_2	H_2
Plate electrode	0.09	0.05	0.01
Weld metal (with argon shielding) . .	0.11	0.06	0.01
Weld metal (without argon shielding)	1.22	0.36	0.07

Titanium is welded with alternating current. AH-T2 flux, when molten, has a high electrical conductivity. Therefore, the welding voltage may be reduced to 12 or 14 v. As a result, the overheating of the weld metal and the near-weld zone is reduced to a minimum. Penetration does not exceed 3 or 4 mm on each side.

The steady melting of a titanium plate electrode (with other conditions being equal) calls for higher current densities than in the case of a steel electrode. This may be attributed to the higher melting point of commercial titanium (1,725° C) and to its higher heat capacity at the melting point as compared with steel. The minimum current density necessary for the steady melting of a titanium plate electrode is 2.5 to 3.5 a/sq mm, which is 4 or 5 times the current density required for a steel plate electrode.

The transformers for the electric slag welding of titanium should preferably have a straight-line volt-ampere characteristic and a low no-load voltage. Table 76 illustrates the electric slag welding of titanium forgings measuring 70 mm by 100 mm in cross section. The electrode was commercial titanium made of plates 8 or 10 mm thick, while the width of the electrode was equal to the thickness of the workpiece, or 70 mm. The joint gap was uniform (26 to 28 mm) throughout. The gap of 26 mm should be considered optimal, as its reduction to less than 24 mm upsets the course of welding.

Table 76

Section of forgings, mm	Size of plate electrode, mm	Joint gap, mm	Depth of slag pool, mm	Welding voltage, v	Welding current, a	Speed of electrode feed, m/hr
50×50	50×8	28	15	14-15	1,100-1,150	4.5
70×100	70×8	27	20	12-14	1,600-1,800	6.0

As titanium has a high electrical resistance, the dry length of a plate electrode should not exceed 450 or 500 mm. As will be recalled, the dry length of a steel electrode of the same cross section may be as great as 3 m. Should a titanium electrode have an increased dry length, it will be excessively overheated. Therefore, when using titanium electrodes, an intermediate conductor should be provided, so as to keep the dry length constant.

In the molten state AH-T2 flux is extremely fluid. Therefore, the edges should be prepared thoroughly. The clearance between the backing strips and the edges should not exceed 0.5 mm. Wet asbestos or clay for packing the clearance should never be used, as water vapour may find its way into the space above the slag pool, and the weld metal will absorb impurities and hydrogen. In some cases the clearance may be packed with dry asbestos.

Special attention should be paid to the condition of the surface of the workpiece and electrode. They should be free from dirt and oxide film. Both the edges and electrode should be clean. The meta should be pickled. In order that the metal of the near-weld zone, which is usually raised to elevated temperatures, be protected from

atmospheric gases, use should be made of wider backing strips, moulding shoes or chills than when welding steel.

The mechanical properties of welded joints are close to those of the parent metal. Table 77 gives some of the mechanical properties

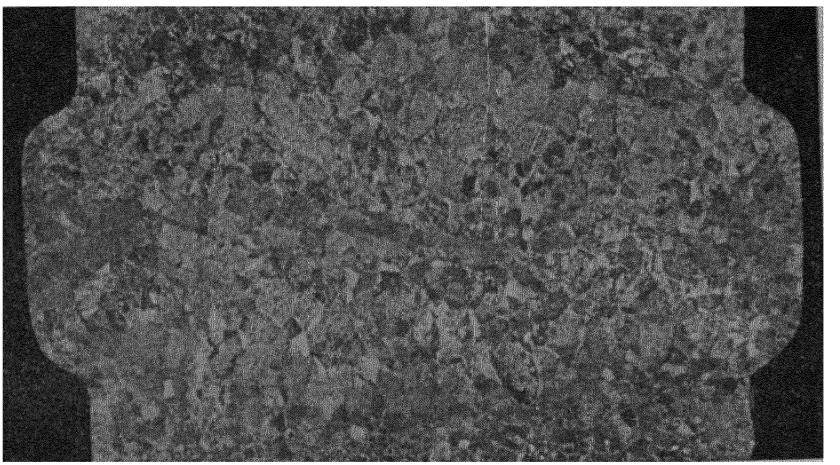

Fig. 209. Macrosection taken across butt weld made by the electric slag process in commercial titanium.

of the parent and weld metal for forgings of commercial titanium measuring 70 mm by 100 mm.

Table 77

Metal	Yield point, kg/sq mm	Ultimate strength, kg/sq mm	Elongation, per cent l = 5D
Parent	46.6-48.4 47.7	56.2-57.2 56.9	20.0-21.0 20.3
Weld	48.0-50.2 48.5	56.8-59.7 58.3	15.0-17.7 16.4

Note: The test specimens were cut across the weld.

Titanium welds made by the electric slag process have coarse-grained micro- and macrostructures. Fig. 209 is a macrograph of a weld.

7. Cast Iron

Until quite recently cast-iron parts were welded or repaired by the arc method or with oxy-acetylene flame (the so-called hot and cold welding of cast iron). When hot-welded, cast iron has to be heated to 600 or 650° C both before and during welding. This is done so as to slow down the rate of cooling and to prevent chilling which is usually accompanied by cracking. When cold-welded, cast iron may be preheated to a relatively low temperature or may not be preheated at all. In this case, it is essential to ensure the necessary graphitisation of the weld metal and the near-weld zone in conditions of rapid cooling.

The welding of cast iron is difficult to mechanise. Therefore, the production rate of welding is very low. This is especially true of hot welding when the workpiece has to be preheated to a high temperature.

On the other hand, heavy sections of cast iron may be made or repaired successfully by the electric slag process, using large-size electrodes.

The technique of electric slag welding with plate or wire electrodes as applied to cast iron differs little from the technique used for steel. A big advantage offered by the electric slag process in this case is that the heating and cooling cycle in the weld metal and the near-weld zone may be controlled within broad limits. In this way, chilling and cracking of the weld metal and the near-weld zone may be prevented.

In welding cast iron, it is essential to obtain welds of the desired chemical analysis. This is particularly true of high-strength magnesium and alloy cast irons. This task may be accomplished by using appropriate welding materials, fluxes, and plate or wire electrodes. Studies of the electric slag welding of cast iron at the Electric Welding Institute have elucidated some aspects of the process. Among other things, it has been found that (1) the manganese silicate fluxes (АН-8, ФЦ-7, etc.) usually employed in the electric slag welding of carbon and low alloy steels are unsuitable for grey and high-strength cast iron; (2) the heating and cooling cycle in the weld metal and the near-weld zone can be controlled by varying welding conditions, composition of flux, etc.; (3) oxidation of alloying elements and especially magnesium, can be sharply reduced when welding high-strength cast iron (as compared with arc and gas welding) by using non-oxidising fluxes based on calcium fluoride; and (4) there are difficulties when starting the weld, as the melting point of cast iron is lower than that of steel.

These studies have suggested the basic lines of approach to the electric slag welding of cast iron.

1. The joint gap and electrode size should be increased, as should the welding current and voltage compared with the welding of steel.

In some cases, the break to be welded up or the bottom part of the butt weld can be preheated with a nonconsumable electrode (graphite or tungsten). In this way, the heat input to the workpiece (the amount of heat per unit length) is increased and the rate of cooling is slowed down.

2. Cast iron, notably high-strength magnesium grades, should be welded with fluorinated fluxes, able to efficiently withdraw sulphur from the weld pool. These fluxes have a high electrical conductiv-

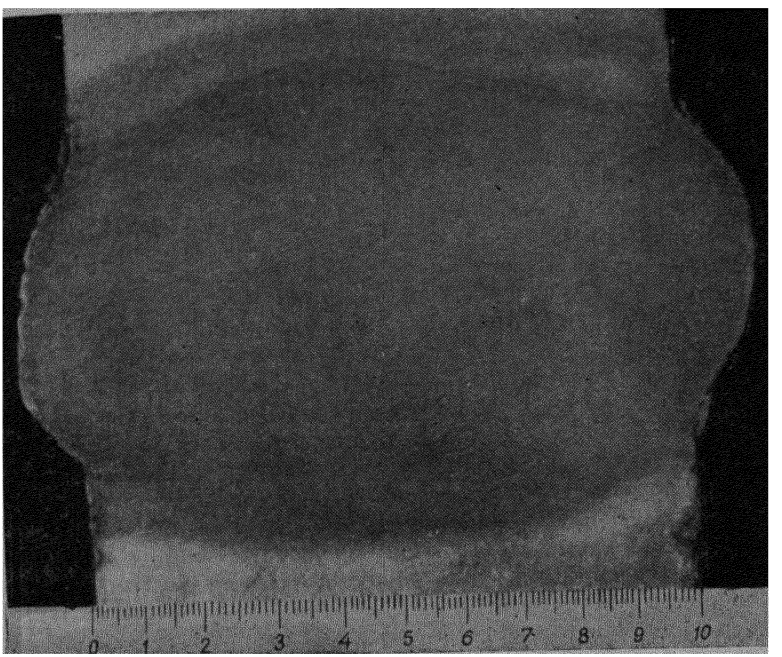

Fig. 210. Macrosection taken across butt weld in grey cast iron.

ity, which property has a favourable effect on the stability of welding and on the thermal cycle of the weld metal and the near-weld zone.

At the Electric Welding Institute, the electric slag process has been successfully applied to grey cast iron 80 to 100 mm thick. In mechanical properties the welded joints were comparable and even superior to the parent metal. The welds were free from cracks, gas pockets and holes, slag inclusions and other defects. A macrograph of such a weld is shown in Fig. 210. More recently, the electric slag process has been used on high-strength magnesium cast iron.

Table 78 illustrates the quantity of sulphur removed from the weld metal in cast iron welded by the electric slag process.

Table 78

Series of experiments	Flux	Sulphur content in weld metal, per cent	
		design	actual
I	АН-8	0.132	0 091
II	ЭС-5 (CaF_2-CaO)	0.140	0.047

8. Hard-facing by the Electric Slag Process

The hard-facing of carbon or low-alloy steel parts is an efficient way of saving high-alloy metal and making parts with a strong and tough core.

Electric slag hard-facing somewhat differs from electric slag welding. In hard-facing, it is essential that penetration be as small as possible, so as to reduce the dilution of the alloyed electrode metal with parent metal. More than half the surface of the slag pool is forced-cooled. Therefore, the slag pool is cooled rapidly, and the fluxes for hard-facing should meet more stringent requirements. Thus, short slags successfully employed in welding prove unsuitable for hard-facing when the gap is narrow.

The intensive interaction between slag and metal results in a substantial loss of alloying elements. Therefore, the fluxes employed for hard-facing should preferably have the lowest possible oxidising capacity.

Many hard-facing alloys tend to crack. To prevent this the workpiece to be hard-faced should sometimes be preheated as well as be allowed to cool slower upon hard-facing.

Grain growth in the as-deposited metal due to the slow rate of cooling reduces its ductility. The subsequent heat treatment often fails to improve mechanical properties materially. To refine the structure, hard-facing has to be carried on with a small amount of heat per unit length, and the weld pool has to be modified.

All these peculiarities must be taken into account in hard-facing procedures.

In electric slag hard-facing, a high-alloy deposit may best of all be obtained by using a filler metal of the desired analysis in the form of solid wire, shapes, castings, sintered wire, etc. For one thing, high alloying with flux cannot be achieved, as much less flux is consumed as compared with the arc process. Secondly, the addition of weighed amounts of ferro-alloy and sintered metal to the slag pool for alloying purposes would inevitably complicate the equipment, to say nothing of the fact that the chemical analysis may be anything but uniform.

The electric slag process is a logical proposition for cases where large quantities of hard-facing metal have to be deposited. The same applies to large-batch and mass production, as less time will be spent on preparatory operations.

Hard-facing procedures worked out to date cover various articles made from several grades of X12 high-chromium ledeburite steels, high-speed steels, 3X2B8 chromium-tungsten steel, chromium-molybdenum-vanadium steel, and austenitic chromium-nickel-manganese steels.

Hard-facing of high-chromium ledeburite steels. These are the following types of steel: X12; X12Ф1; X12B1Ф; X12M; X12TФ; nitrogen-containing X12, as well as No. 2 sormite. The principal alloying elements in X12 steels are carbon (1.2 to 2.3 per cent) and chromium (11.5 to 13.5 per cent). Some grades of this type are also alloyed with small quantities of tungsten, molybdenum, nitrogen, nickel, vanadium and titanium. Being high in chromium and carbon, these steels are extremely hard, resistant to wear, deeply hardenable, and are deformed little in quenching. After annealing they machine reasonably well. Grade X12 steels are indispensable in tools and parts which have to stand up to heavy wear in service.

The hard-facing procedure for X12 steels has been worked out with an eye to cone-shaped jobs. For its description see Chapter IV. The electrodes are of sintered wire, and the flux employed is Grade AH-22. The chemical analysis of sintered wires intended for the electric slag hard-facing of X12 steels is given in Table 79.

Table 79

Grade	Chemical analysis, per cent							
	C	Si	Mn	Cr	W	V	Mo	Ni
ПП-Х12ВФ/ЭШ	2.3-2.4	0.3	0.4	16.0-17.0	1.2	0.3	—	—
ПП-Х12М/ЭШ	2.0	0.3	0.4	15.5	—	0.3	0.7	—
ПП-Х12Ф1/ЭШ	2.0	0.3	0.4	16.0	—	1.2	—	—
ПП-Х12Н4Ф/ЭШ	2.3-2.5	0.3	0.4	16.0	—	0.3	—	4.0
ПП-Х12/ЭШ	2.3-2.5	0.3	0.4	16.0-17.0	—	—	—	—

With a current of 220 to 500 a per electrode, a voltage of 30 to 35 v and a wire diameter of 2.8 to 3 mm, the chemical analysis of the deposited metal will be that of regular steel X12.

The partial oxidation of the chromium, vanadium, carbon and other alloying elements during hard-facing can be compensated by a proportional increase in their content in the sintered wire. The extent of oxidation varies with the current and voltage maintained, type of current, polarity, flux composition, etc.

Both direct and alternating current may be employed in hard-facing by the electric slag process. Preference should be given to

alternating current, as simpler equipment will do in this case. It is important to note that with alternating current alloying elements will be oxidised at a slower rate than with direct current. Besides, with alternating current the chemical analysis of the deposited metal will vary less sharply than when applied by the arc process.

Workpieces up to 20 or 25 kg in weight may be hard-faced by the electric slag process without preheating. Larger workpieces have to be preheated so as to avoid cracks in the hard-facing deposit. The preheating temperature depends on the size of the work, but will be higher for larger articles. Big jobs may sometimes call for concurrent heating. The surfacing deposit of steel X12 is of low ductility. Therefore, the work should be heated at 700° C for an hour or two immediately upon hard-facing and allowed to cool slowly upon heating, or cold cracks will be inevitable. This precaution, however, will be redundant, if cracks in the deposit do not affect the performance of the article.

If a hard-faced product is to be machined, it should be annealed upon hard-facing (slowly heated to 870 or 900° C, held for 1 to 4 hours, cooled to 700°, held at 700°, and cooled in the air). The time between the beginning of cooling from 870° and holding at 700° should total at least ten hours. When thus annealed, the deposit will have a hardness of not less than 24 to 27 R_C and machine reasonably well.

The desired mechanical properties are obtained by hardening and tempering. The procedure should be chosen with an eye to the future application of a given job. If the hard-facing deposit is to be hard, but the article will not have to stand up to shocks, quenching from 950° or 1,000° C and tempering from 200° may be recommended. The hardness will be 60 to 62 R_C.

If the job is to cut well and to be red-hard, treatment to secondary hardness may be advisable (quenching from 1,100 or 1,150° C and tempering). The hardness will then be anywhere from 61 to 64 R_C. Parts designed for service under conditions of shock should have a hard-facing deposit of an increased toughness. To this end, they should be quenched to austenite from 1,100° and then tempered at 180 or 200° C.

In hardening with quenching from elevated temperatures, care should be taken not to overheat the parent metal—low-alloy or carbon steel. This point should be borne in mind when choosing the material for the workpiece and heat-treatment conditions, so as not to hold a composite article at a high temperature for too long a time. A prolonged holding at a high temperature when heating for hardening has a detrimental effect on the plastic properties of the deposited metal.

Fig. 211 illustrates the effect of quenching temperature on the hardness and impact toughness of the surfacing deposit of the X12BΦ type, while Fig. 212 shows the influence of holding time.

Besides heat-treatment conditions, the structure of the surfacing deposit also has an appreciable effect on its mechanical properties. Table 80 presents data on the effect of the rate of cooling of the surfacing deposit (Grade X12BΦ) during crystallisation on its toughness after quenching from 1,100° C and tempering from 200° C. As will be seen, the impact toughness of the surfacing deposit increases with the rate of cooling.

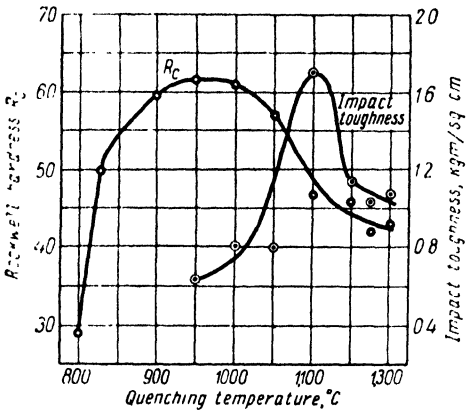

Fig. 211. Effect of quenching temperature on hardness and impact toughness of X12BΦ deposited metal (tempering at 200° for 1.5 hours).

Hard-facing of chromium-tungsten steel 3X2B8. The surfacing procedure has been worked out specifically for the tong bits of ingot cranes.

Tong bits have to handle hot ingots which have to be placed into or removed from reheating furnaces prior to rolling. Until quite recently tong bits were pressed from plain carbon steel and then surfaced manually with No. 1 sormite, a hard alloy, or were used without surfacing. In both cases, the bits stood up to wear poorly.

In view of the conditions under which the tong bits of ingot cranes have to operate, surfacing was then made with high-alloy chromium-tungsten steel 3X2B8 which is remarkable for its high thermal stability, red hardness and strength at elevated temperatures. This steel has proved to be ideal for tools handling metal jobs at white heat.

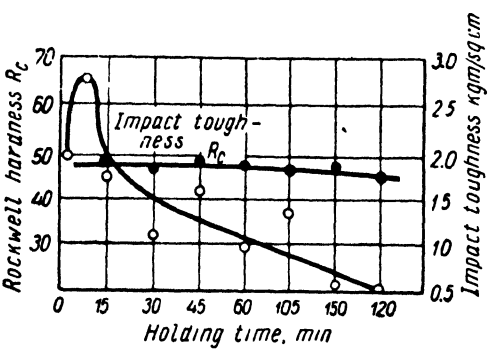

Fig. 212. Effect of holding time at hardening temperature of 1,100° on hardness and impact toughness of X12BΦ deposited metal (tempering at 200° for 1.5 hours).

The surfacing electrode is a rolled rod of steel 3X2B8, 20 mm in diameter, while the blank is made of Grade 45 steel. The flux is ground high-quality fluorspar which oxidises the alloying elements little. The hard-facing conditions are as follows:

current, 1,000 to 1,100 a; voltage, 18 to 22 v; electrode speed, 6 m/hr; and surfacing time, 1.3 min.

The surfacing deposit is approximately of the following composition: 0.3-0.35 per cent C; 2.0-2.5 per cent Cr; 7.5-9.0 per cent W; 0.2-0.3 per cent V; 0.2-0.3 per cent Mn; and 0.2-0.4 per cent Si.

Macro- and microscopic examination of the deposited metal has shown that it is dense and is free from any defects, such as gas pockets and holes, cracks, slag inclusions, etc.

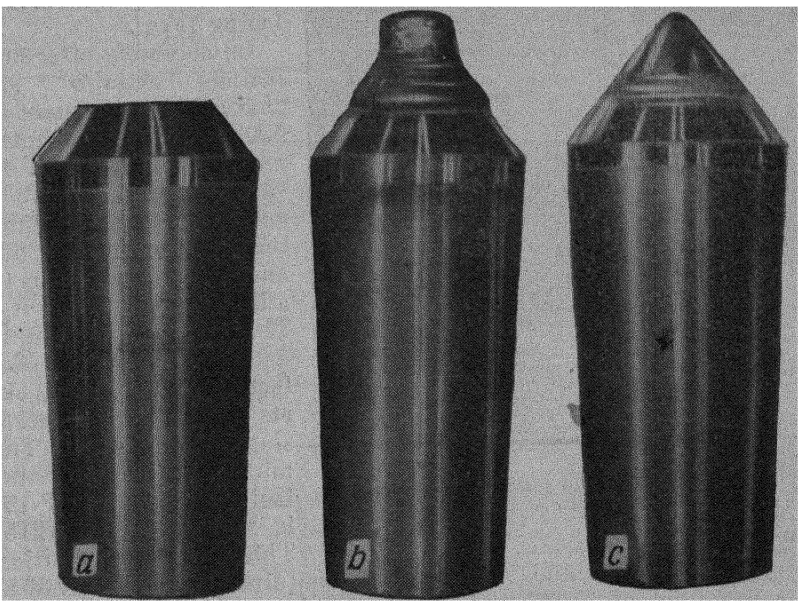

Fig. 213. Sequence of operations in hard-facing ingot-crane tong bits with large-size electrodes by the electric slag process:
a — blank; *b* — hard-faced blank; *c* — finished tong bit.

After surfacing and tempering, the steel 3X2B8 deposit has a hardness of 52 to 54 R_C.

Fig. 213 shows a blank to be hard-faced (at *a*), a surfaced tong bit blank (at *b*) and machined bit after surfacing (at *c*), while Fig. 214 illustrates the macrostructure of a surfaced bit. Hard-faced by the procedure described above, the tong bits show a four- to sixfold increase in strength compared with the bits surfaced with sormite.

Bits are surfaced in A-578 electric slag welding machines. Power is drawn from standard welding transformers like the ТСД-1000-3, the СТ-2000, etc.

Hard-facing of high-speed steels. When heat-treated, high-speed steels are hard, resistant to wear, red-hard, and strong at elevated temperatures.

Steel P-18 is a typical high-speed steel. It is surfaced in much the same way as steel 3X2B8. The electrode is a wrought rod 20 mm in diameter. The deposit applied without preheating and cooled in the air upon hard-facing shows quench-cracks. Preheating to 550° C, on the other hand, prevents any cracking in the hard-facing layer.

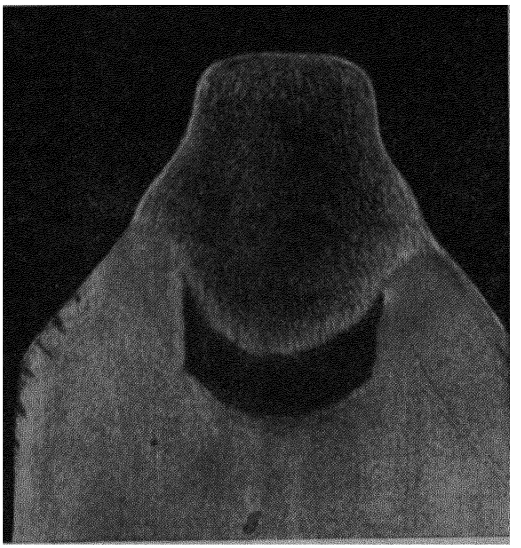

Fig. 214. Macrograph of tong bit hard-faced with steel 3X2B8.

Immediately after surfacing, articles are charged into a furnace at 600° C, held for 1.5 hours and allowed to cool in the air. After complete cooling, they are double-tempered at 560 to 580° and held for 1.5 hours to a hardness of 63 or 64 R_C. The surfacing deposit is dense and free from defects, such as gas pockets and holes, cracks, slag inclusions, etc. The microstructure of the surfacing deposit (steel P-18) is shown in Fig. 215. This is a solid solution surrounded by a carbide network and containing excess carbides.

Ground fluorspar, which has a low oxidising capacity, reduces the burning loss of alloying element to a minimum. Table 81 presents the results of a spectral analysis of the electrode and parent metal.

Table 80

Deposit grade	Chemical analysis, per cent					Instantaneous rate of quenching from 1,200°, deg C/sec	Toughness, kgm s[1] cm
	C	Cr	W	Mo	V		
X12BΦ	1.72 2.0	12.7 14.6	1.1 1.38	— —	0.17 0.2	1.4 4.6	0.92 2.99

Table 82 presents the chemical analysis of sintered wire employed for the surfacing of high-speed steels and the chemical analysis of the surfacing deposit. (The surfacing was made using 360 a at 35 to 38 v, and AH-22 flux.)

Table 81

Metal	Content, per cent					
	C	Si	Mn	Cr	W	V
Electrode	0.80	0.50	0.38	4.15	17.8	1.20
Deposit	0.75	0.35	0.31	4.05	17.1	1.12

Table 82

Metal	Content, per cent				
	C	Cr	W	V	Mn
Wire . . .	1.28	2.53	13.3	1.51	0.66
Deposit . .	0.84	1.57	13.0	1.58	Not found

The surfacing deposit is reasonably homogeneous in composition. The hardness throughout the volume of the deposit varies from 1 or 2 R_C. After tempering at 580° C, the hardness of the surfacing deposit is 64.5 R_C. For grain refinement, it is advisable to speed up the cooling of the workpiece. The wear resistance of the surfacing deposit is half as high as that of steel P-18.

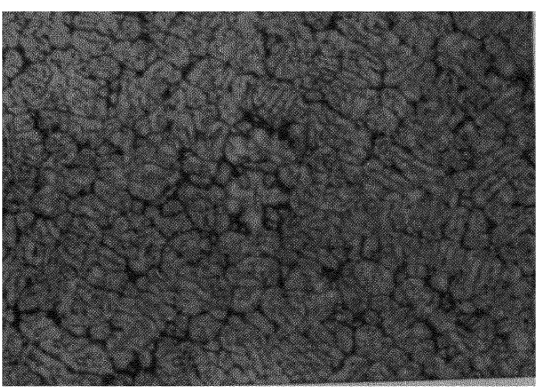

Fig. 215. Micrograph of P-18 deposited metal (magnification ×100).

An increase in the carbon content of the deposited metal reduces its hardness due to a higher proportion of residual austenite. A coarse ledeburite network appears at the grain boundaries, and the metal becomes embrittled. With sintered wire of the chemical analysis given in Table 82 it is possible to make composite flanks for large hobbing cutters, mortising tools, disk cutters, etc.

Resistance slag welding of heavy sections. It is uneconomical to turn surfacing into a process by which large quantities of metal are made into a finished product. Instead, it is simpler to cast or forge

the worn-out part of a tool from a high-alloy metal and to weld it to the tool to be reconditioned or a blank from carbon or low-alloy steel. So far the highest production rates in this operation have been obtained with resistance flash butt-welding. However, the application of this method to heavy sections calls for custom-made intricate equipment and high-power sources of current, which is only warranted in large-scale production.

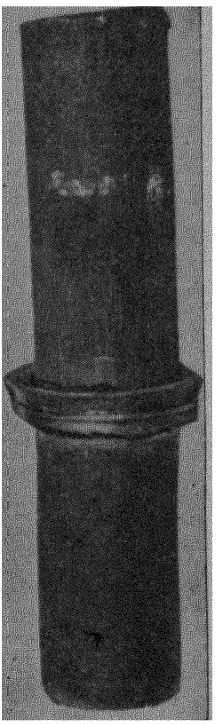

Fig. 216 Welded joint between two bars 120 mm in diameter.

The manual and semi-automatic welding methods employed in small-batch and piece production are inefficient, while the human factor has a direct bearing on the quality of the welds produced.

Heavy sections of similar and dissimilar metals can be conveniently welded by the resistance slag method described in Chapter I.

Fig. 216 shows a resistance slag weld made in two bars of Grade 45 steel 120 mm in diameter, while Figs. 217*a* and *b* are macrographs of welded joints. To date, resistance slag welding has been successfully applied to parts with a cross-sectional area of up to 25,000 sq mm under laboratory conditions. Table 83 shows the mechanical properties of a welded joint made in a workpiece of Grade 45 steel 120 mm in diameter.

According to Table 83, the mechanical properties of the weld are comparable (upon welding) with or even superior (after normalising) to those of the normalised parent metal.

Suggested conditions for resistance slag welding of bars of various cross section are given in Table 84.

Resistance slag welding may be advantageously applied to parts with a cross-sectional area of 6,000 sq mm or more.

The main merits of resistance slag welding are simple equipment, high production rates, applicability to heavy sections with relatively weak power sources, very sound joints, applicability to high-alloy and carbon steels, and to parts differing in cross section.

A comparison between resistance slag welding and the most perfect resistance welding method—flash butt welding—will show, among other things, that flash butt welding as applied to round bars with a cross-sectional area of about 800 sq mm, calls for a welding transformer of 600 to 800 kva and an upset force of 40 or 50 tons. Resistance slag welding on similar jobs can be performed with a 100 or 120 kva transformer and with an upset force of several ten kilograms,

Table 83

Metal	Heat treatment	Yield point kg s	mm	Ultimate strength, kg/sq mm	Elongation, per cent $l=5D$	Reduction of area, per cent	Impact toughness, kgm/sq cm
Weld	None	39.6	62.5	12.2	36.8	5.0
Ditto	Normalising .	38.9	62.1	17.3	58.9	4.98
Parent	Ditto	29.8	58.2	14.9	35.4	3.17

as the edges are upset in a metal pool. The weld time is approximately the same in both cases. It should be noted that jobs with a compact

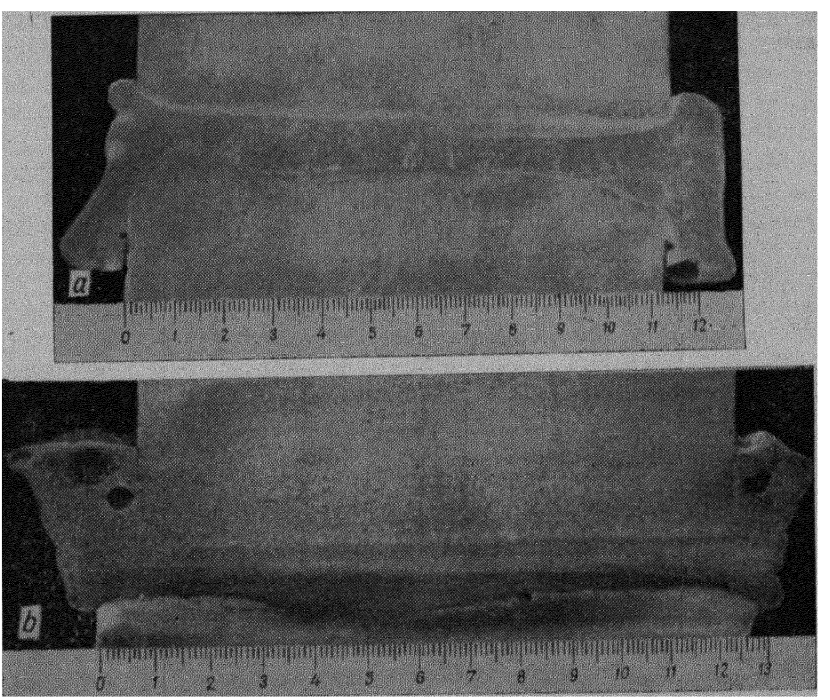

Fig. 217. Macrosections of welded joints made by resistance slag welding: *a* — Grade 45 steel+Grade 45 steel 120 mm in dia; *b* — Grade 45 steel+Grade X12Φ1 steel 130 mm in dia.

cross-sectional area of 18,000 sq mm or more have not been welded by the flash-butt method to date.

Table 84

Bar dia, mm	Bar grade		Current, a	Voltage, v	Total weld time, min
	bottom	top			
50	Х12Ф1	45	1,000-1,100	20-15	2.0-2.5
60	У8	45	1,200-1,300	20-15	2.5-3.0
80	45	45	1,600-1,800	20-15	3.0-3.5
100	Ст. 5	Ст. 5	3,000-3,500	25-20	4.0
120	Х12Ф1	45	3,500-4,000	25-20	5.0-5.5
150×130	Х12Н4Ф	30Л	4,200-4,800	25-20	6.0

Resistance slag welding may be applied to heavy sections and various shapes: round, rectangular, etc., such as cast-welded and rolled-welded links, forks, shafts, gears, and the like. It can be employed in hard-facing parts from structural steels with high-alloy wear-resistant steels (drill bits, cutters, large reamers, etc.).

Chapter IX

ELECTRIC SLAG WELDING OF HIGH-PRESSURE VESSELS

1. Types of Welded Vessels

The first time the advantages of electric slag welding were clearly revealed was when this method was employed in the fabrication of thick-walled drums for high-pressure high-temperature boilers. The first drums to be welded by the electric slag process were made at the Krasny Kotelshchik Boiler-Making Factory in Taganrog in 1952. At the outset only longitudinal seams were made by this method. In 1953-55, the process proved to be successful also in the making of girth seams. In 1954, the manufacture of boiler barrels was started at the Barnaul Boiler-Making Factory, and since 1956 in China and Czechoslovakia.

A welded drum made by the Krasny Kotelshchik Factory for a type TII-230 boiler is shown in Fig. 218. It consists of a cylindrical shell 1,300 mm ID and with a wall thickness of 90 mm, and two heads. The cylindrical shell is 11,400 mm long. The drum is intended for boiler units with a steam raising capacity of 230 tons per hour at 110 atm. It is made of boiler steel 22K.

Prior to 1952, thick-walled drums were all-forged or forged-welded. They were of two courses joined together by a girth seam at the middle. Small drums were all-forged integral with heads. That was an expensive and complicated method. Each drum required an ingot weighing up to 150 tons. Later drums were made of a long shell and two heads pressed separately, or of two forged shell courses and two heads. The sequence of operations in making forged blanks for boiler drums was as follows: (a) a large ingot was cast; (b) the ingot was reheated in a furnace and forged in a 10,000 ton press. In forging, the blank had to be put into the furnace for reheating several times; (c) the square ingot was rounded, its cope and drag sides were trimmed by a press, the blank was upset, and the forging was pierced by a hollow piercer; (d) the pierced shell was then rolled on a mandrel from middle to ends with reheatings in a furnace; and (e) the forging was heat-treated and machined on a lathe. The waste in shavings and cuttings was as much as 50-60 per cent of the net weight of the

blank. A set of two high-pressure drums on a purpose-made lathe with 1,200 to 1,500 mm centre distance took about 4 or 5 weeks to make.

The high labour requirements and costs of forged and forged-welded drums spurred a change-over to drums welded of several shell courses. Each course was rolled and had one longitudinal seam. A large high-pressure drum would consist of three or four courses each 2,850 to 3,500 mm long and 90 mm thick. The shell courses were joined together by girth welds. A small drum with a wall thickness of

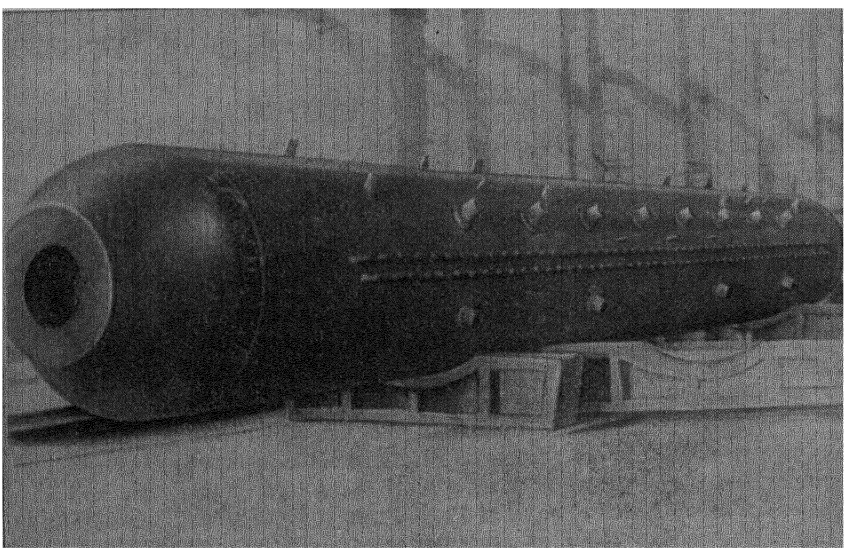

Fig. 218. Drum for Type ТП-230 boiler

70 mm would be composed of two shell courses and two heads. The longitudinal and girth seams of the shell courses were welded by the multipass submerged arc method. The manufacturing technique for welded boiler drums was as follows:

(1) A plate was marked out and flame-cut with large allowances.

(2) The plate was then heated in a furnace to 1,050° and formed into an open shell on rolls. Experience showed that when the edges were first prepared for welding and the plate then roll-formed into a shell, the included angle of the joint would strongly depend on how accurately the edges were made to meet on the rolls. To avoid this difficulty, the edges were not brought abutt. Instead, a gap of about 300 or 350 mm wide was left so that each edge might be machined for welding on a planer after the plate had been bent on rolls.

(3) The blank was marked out again, the allowances were removed, and the longitudinal edges of the shell were planed for the first time.

(4) The shell was reheated and bent to closure.

(5) Upon descaling, the shell was mounted on a rotator where it was fitted with clamps and other line-up fixtures on the inside and outside and with starting and finishing tabs.

(6) The sealing weld was made manually in two or three passes on the inside. To avoid hot cracks in the sealing weld, the shell was preheated to 200 or 250° C.

(7) After the sealing weld was completed, the clamps on the outside were removed.

(8) The shell was then mounted on a planer for another planing and grooving of the edges, including the removal of defects in the manual sealing weld.

(9) Prior to the automatic welding of the main weld, the shell was reheated again.

(10) The main weld was made automatically in 18 to 20 passes (with a metal thickness of 90 mm) on the outside, with the slag chipped away after each pass.

(11) Immediately after the main weld had been automatically welded with the submerged arc, the shell was heat-treated for a third time—by tempering—to prevent cracking.

(12) The line-up fixtures were then removed, the sealing weld was chipped out and made anew on the inside of the drum. In the case of multipass welds in heavy sections, they had a reinforcement of 60 to 80 mm wide and 6 to 7 mm high. This reinforcement could not be left when a shell had to be sized.

(13) The shell was mounted on a planer for a third time for the removal of the outside reinforcement. Inside the shell, the reinforcement was removed by an air chipping hammer. In all, the original plate and the shell were worked at 14 stations and were reheated in a furnace five or six times.

When starting the fabrication of welded boilers the Barnaul Boiler-Making Factory was able to draw upon the experience of the Taganrog and other works. At Barnaul, rolls for forming shell courses were replaced by presses, and both shell courses and drum heads were pressed from plate in heavy 8,000 ton hydraulic presses. Two production layouts were adopted:

1. Drums with a wall thickness of 48 to 50 mm and a diameter of more than 1,000 mm were made of two cold-pressed shell halves.

2. Drums with a wall thickness of over 50 mm were made of two large hot-pressed shell halves.

After pressing and marking out, the halves were flame-cut to size, and the edges were prepared for welding on a planer. The halves were welded by the multipass submerged arc process, using one electrode.

After the longitudinal seams had been made, the ends of the shell were trimmed and bevelled on a lathe for girth seams between the shell and heads. The girth seams were also welded in many passes. There were plans to change over to automatic welding with a three-phase arc. The advent of electric slag welding, however, brought about sweeping changes in the fabrication of high-pressure boilers.

As compared with the method adopted by the Taganrog Factory, the technique employed at the Barnaul Works offered the following

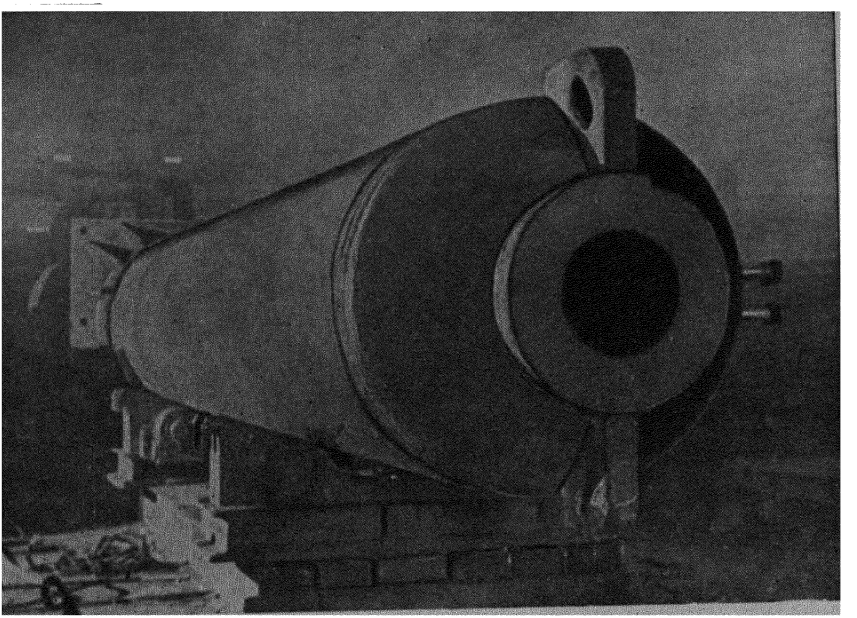

Fig. 219 High-pressure cylinder with walls 155 mm thick

advantages: (a) pressed shell halves could be made up to 6 m long, while roll-forming could only produce courses under 3.5 m long. Particular difficulties arose in forming plate thicker than 100 mm, while forming in heavy presses posed no problems; (b) it is hard to roll-form a shell half or a shell course of true geometrical shape. Shells made by roll forming and subsequent welding had to be sized, while in the case of shells made of pressings this operation could be dispensed with.

The class of high-pressure vessels also includes cylinders for hydraulic presses. These cylinders are intended for hydraulic-accumulator stations and are designed to withstand a pressure of 320 atm. A general view of a 10,000 litre cylinder of this type is given in Fig. 219. These cylinders can be made in capacities of 2,000 and 4,000 litres.

Prior to 1956, high-pressure cylinders were drop-forged from large ingots on custom-made equipment and machined on large lathes. The bottoms of cylinders were either beaded on presses or pressed separately to be then welded to an all-forged hollow. By this method, cylinders with a capacity of not more than 10,000 litres could be made, as the ingots required for their manufacture had to be more than 150 tons in weight. The forging of ingots called for custom-made forging presses with a force of not less than 10,000 tons and heavy lathes. In the manufacture of all-forged cylinders, some 40 per cent of the ingot weight was wasted in forging, while another 30 or 35 per cent was wasted in cuttings when the outside and inside surfaces of a forged shell were machined. Consequently, not more than 25 per cent of the ingot weight went into the finished product. Electric slag welding has made it possible to fabricate pressed-welded cylinders in capacities that were beyond reach to the old equipment.

At present the electric slag process is employed to fabricate drums for boilers operating at elevated and high pressures. For instance, steel 20K is welded into drums with a diameter of up to 1,600 mm and a wall thickness of 50 mm. Meanwhile, steel 22K goes to make drums with an inside diameter of 1,300 mm and a wall thickness of 90 mm, as well as with a diameter of 900 mm and a wall thickness of 70 mm; cylinders for the accumulator stations of heavy-hydraulic presses, 4,000 litres in capacity, 20.2 tons in weight, 820 mm in diameter, 110 mm wall thickness, and 8,255 mm in length; and cylinders 10,000 litres in capacity, 49.7 tons in weight, 1,170 mm in diameter, 10,000 mm long and with walls 155 mm thick.

Similarly, electric slag welding may be applied to the construction of thick-walled stills for the synthesis of ammonium, synthetic fuel and other chemicals.

2. Slag-welded Vessels from Roll-formed Plate

An apt instance of a drum slag-welded from roll-formed shells is provided by the type ТП-230 boiler.

A plate is marked out and flame-cut to size. After cutting, the plate is heated in a furnace to 1,000 or 1,050°C and is immediately roll-formed into a shell course with flat areas 100 or 150 mm wide along the joint (Fig. 220). The plate should be roll-formed so that the axis of the joint runs parallel to the axis of the shell.

After cooling, the formed plates are cleaned of scale with an air hammer, are fitted with clamps, and their edges are squared with an oxy-acetylene torch. The clearance thus obtained between the abutting edges is 26 to 28 mm wide. The edges are not machined.

The next step is to mount and tack-weld starting and finishing tabs and to remove the flash left by flame-cutting from the edges. Then the longitudinal seam of the shell course is checked for proper

fit-up. The edges may have a local offset of not more than 3.5 mm. The difference in the clearance between the abutting edges on the inside and outside should not exceed 4 mm.

To hold the edges in line and properly separated in welding, clamps are tack-welded inside the shell course at every 400 mm (Fig. 221). One clamp should be placed within 50 mm of the weld end. The openings in the clamps should be large enough for the rear tractor and rear moulding shoe of the welding apparatus to move through them freely. The clamps are corner-welded with single fillet welds having a leg of 6 mm, using type Э42А, Grade УОНИ13/55 electrodes 5 mm dia.

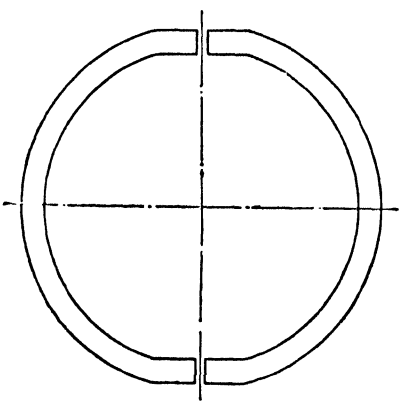

Fig. 220. Shell course formed on rolls in preparation for welding.

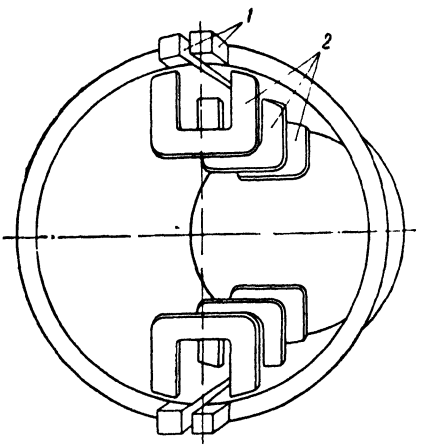

Fig. 221. Arrangement of fit-up clamps and finishing tabs on shell:
1 — finishing tabs; *2* — clamps.

Simultaneously a test plate is welded. The welding conditions for the test plate are the same as for the workpiece. The plate is then gamma-rayed, coupons are taken from it for mechanical tests, and chemical and metallographic analyses so as to see whether the welded joint meets the specifications for high-pressure boiler drums.

The assembled shell course is mounted on the welding apparatus vertically, and the longitudinal seam is welded. The welding conditions are given in Table 85. After welding, the shell course is transferred to a station where the clamps, starting and finishing tabs are removed. Then the shell course is reheated to 1,000 or 1,050° C in a furnace and sized on the forming rolls.

After cooling, the shell course is cleaned of scale and transferred on to a rotator for gamma-ray examination. Defects likely to develop when the welding is stopped for any reason and restarted are removed with an air chipping hammer or with a gas torch. The chipped spots

Table 85

Specification	A-340 apparatus	A-372P, A-385 apparatus
Steel grade	20K	22K
Thickness, mm	90	90
Joint gap, mm	26^{+2}	28^{+2}
Wire grade	Св-08ГА	Св-15Г
Wire diameter, mm	3	3
Number of electrodes	1	2
Current type	d. c., reversed polarity	a. c.
Speed of wire feed, m/hr	300-340	200-220 (per electrode)
No-load voltage, v	60	50
Welding voltage, v	42-46	42-48
Current, a	700-720	550-600
Depth of slag pool, mm	35-40	40-50
Water pressure, kg/sq cm	2.0	2.0
Dry length of electrode, mm	60-70	80-100

are welded up manually by electric arc welding, with the slag removed after each pass.

It would be relevant to dwell on the technique used for restarting the welding when it has to be stopped on a longitudinal seam. If, upon removing the cold slag, the welding is restarted in the same manner as at the beginning of the weld, poor fusion and poor penetration at the end of the restarted weld are inevitable. This is because the parent metal solidifies during stoppage. When the slag pool is being re-established, the heat is insufficient for complete fusion and penetration to be obtained across the thickness of the edge. To avoid this, it is advisable to restart the weld as follows (Fig. 222): (a) cut out or melt out the portion of the weld having a shrinkage cavity; (b) bevel the upper portion of the weld at an angle of 45°; (c) set the electrode and guide to the extreme position, where the bevelling is largest; (d) reheat the weld with a gas torch prior to welding; (e) restart the welding with the stationary electrode, then move it in a weaving pattern, gradually increasing its swing; as soon as the slag pool has reached the top of the bevel, switch on the automatic weaving-motion drive.

In some cases, when the welding has been stopped a short distance from the beginning of the weld, it will be well advised to chip out the deposited metal and start the weld anew.

After inspection, the shell course is mounted on a facing lathe where both ends are squared. The machined shell course is then transferred to the assembly station where shell courses are assembled into a complete shell by means of clamps and tabs. The shell is assembled without heads, with water-cooled copper rings placed on the inside.

In all, it takes 8 tabs measuring 250×100×15 mm to assemble a shell. The tabs are mounted on edge across the girth seam on the outside and corner-welded to the shell with a single fillet weld with a leg of 8 mm by using type Э42А (УОНИ13/55) electrodes, 5 mm dia. In assembly the abutting edges are separated an equal distance over the entire length of the girth seam by means of spacers 20×26× ×30 mm, tack-welded to the ends of the shells. Prior to welding,

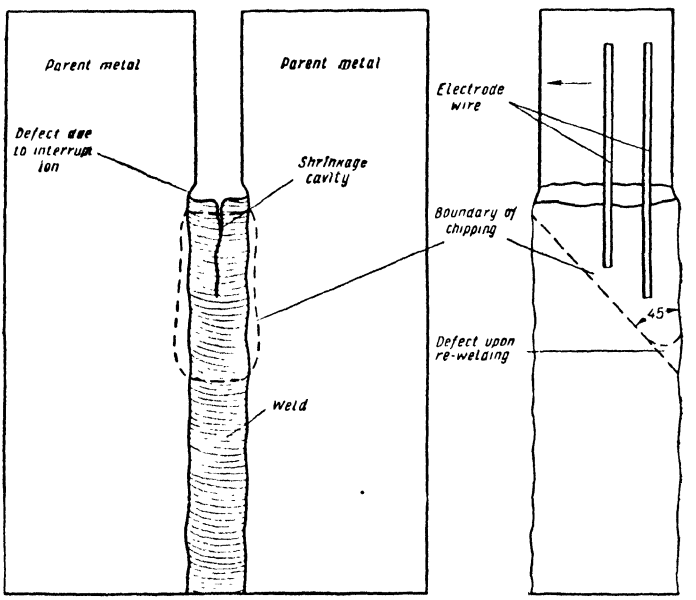

Fig. 222. Deseaming a weld after inadvertent stoppage of electric slag welding.

the spacers are removed from the gap. On the inside, the parts are held together by 8 clamps which are tack-welded to the shell in the same way as the tabs. Thanks to these clamps, the joint gap will not change in the welding operation. These clamps also fasten a split water-cooled copper ring which forms the weld on the inside of the shell. The ring is mounted by means of wedges in the manner described in Chapter V. In assembly the edges may have an offset of not more than 3 mm. The clearance between the abutting edges in the girth seam should not vary by more than ±2 mm. The assembled shell is then mounted on the roller stand of the welding unit. Simultaneously with the shell a test course about 1 m long is assembled for welding. The test course is welded ahead of the shell and helps to determine the mechanical and other properties entered in the certificate of the welded drum.

Prior to welding, the outside tabs are removed, the traces of the tack-welds are chipped and ground so that the outside moulding shoe is free to move along the joint. The welding conditions for girth seams are given in Table 85 (the welding of a girth seam is shown in Fig. 223). After the shell is welded, its inside clamps are removed, and the girth seams are cleaned, the shell is reheated to 1,000 or 1,050° C in a furnace, and then is sized on rolls. After cool-

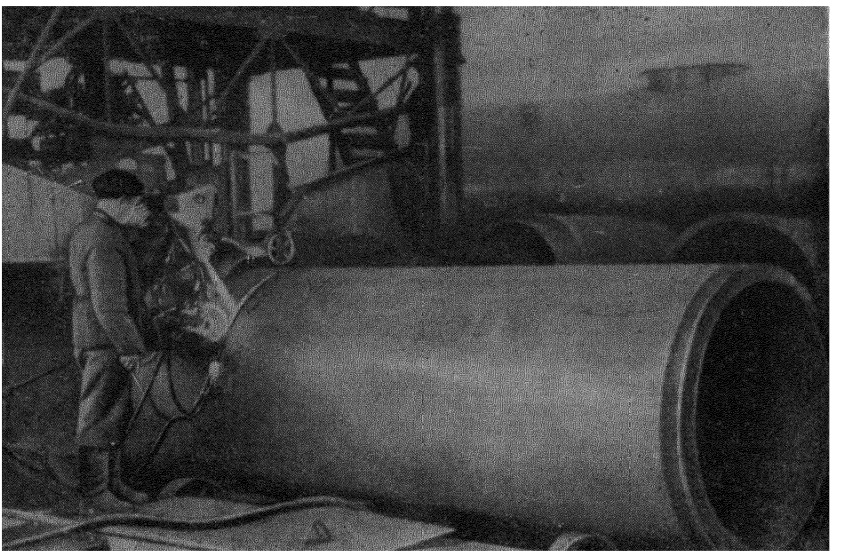

Fig. 223. Welding a circumferential seam on Type TII-170 boiler drum.

ing, the ends are machined on a facing lathe so as to prepare the edges for welding the heads to the shell. Then the heads are welded to the shell by the multipass submerged arc method.

The next step is to place the drum in a furnace for stress-relieving. After cooling, scale is removed from both the inside and outside of the drum.

3. Slag-welded Vessels from Pressed Plate

An example of high-pressure vessels fabricated by electric slag welding from pressed blanks is provided by 10,000 litre cylinders. Pressings made in a 8,000 ton press are planed or flame-cut along their edges and clamped into a shell up to 7,100 mm long (Fig. 224). In assembly the spacing between the abutting edges is maintained constant by means of spacers, wedges and clamps (Fig. 225). The

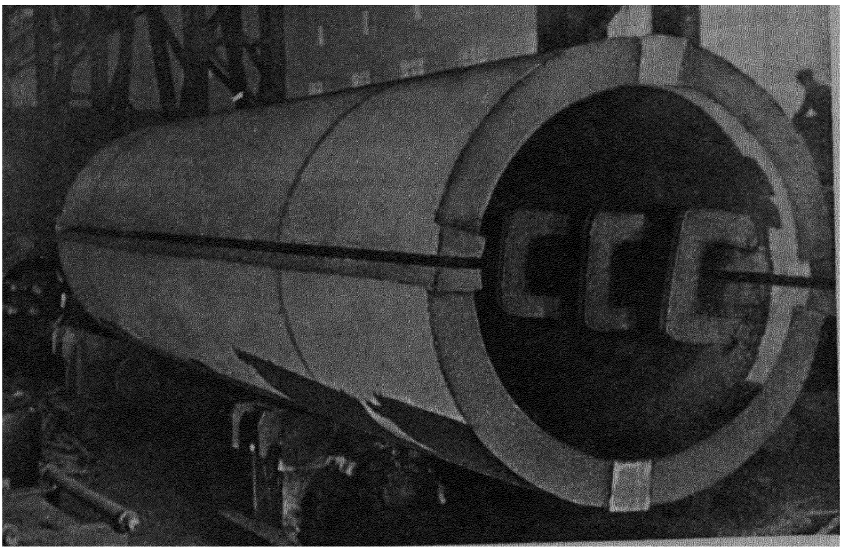

Fig. 224. Shell made up of two pressed halves with walls 155 mm thick, fitted up for electric slag welding.

spacers are removed prior to welding. The two longitudinal seams are then slag-welded. The assembled shell is placed vertically (Fig. 226), an A-372 welding apparatus is mounted, and welding is started. Fig. 227 shows the completion of longitudinal seams. After welding, the clamps are removed. Fig. 228 shows a finished shell stripped of all line-up tools. The welded shell is mounted on a facing lathe where its edges are prepared for the electric slag welding of girth seams. The welding of girth seams is shown in Fig. 229. The sequence of operations in the fabrication of high-pressure drums and cylinders, with longitudinal and girth seams made by the electric

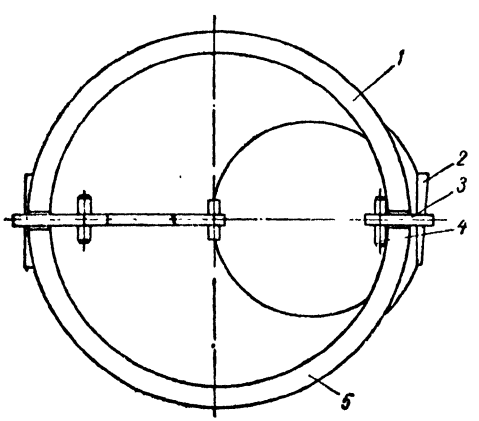

Fig 225. Diagram showing a shell fitted up for welding by means of spacers and wedges:
1 — upper half, *2* — wedge, *3* — spacer; *4* — pin; *5* — lower half.

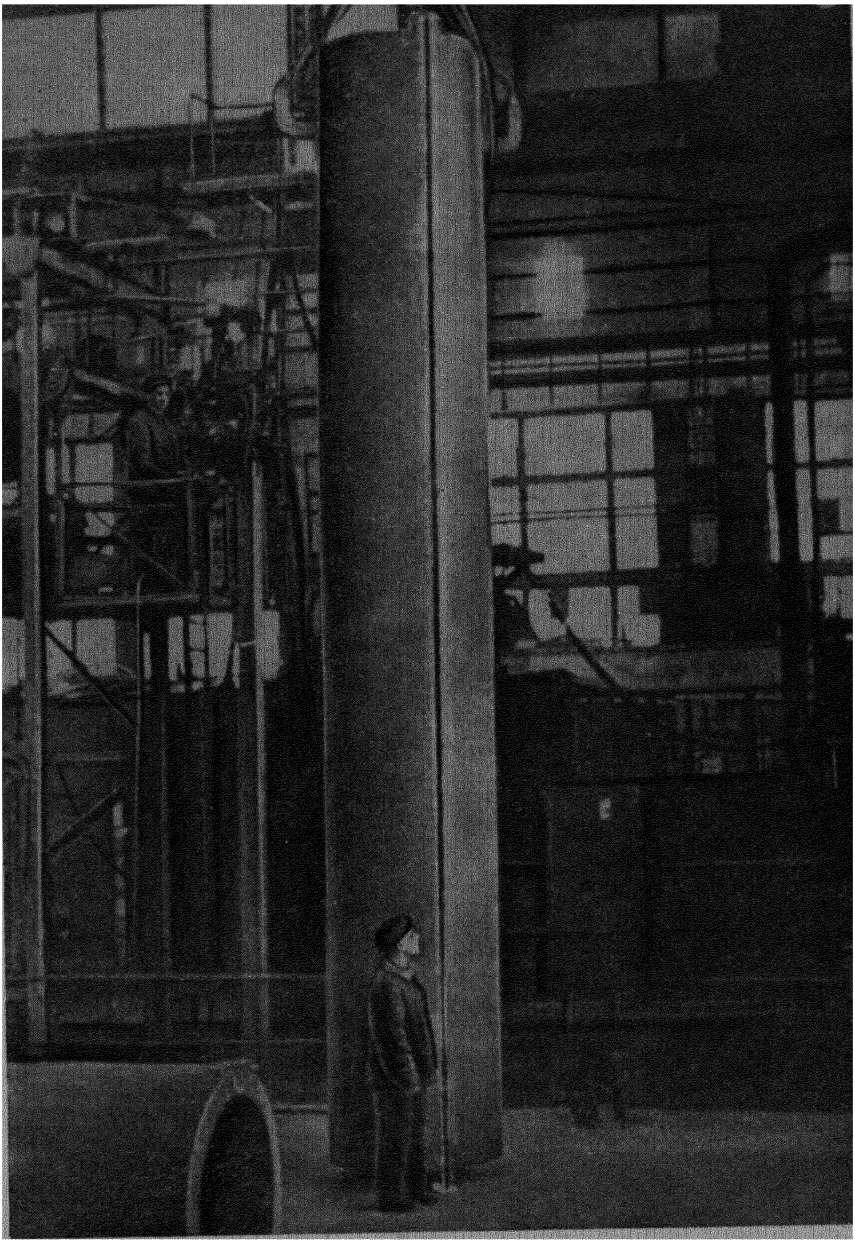

Fig. 226. Shell 7,600 mm long and 110 mm thick fitted up for welding.

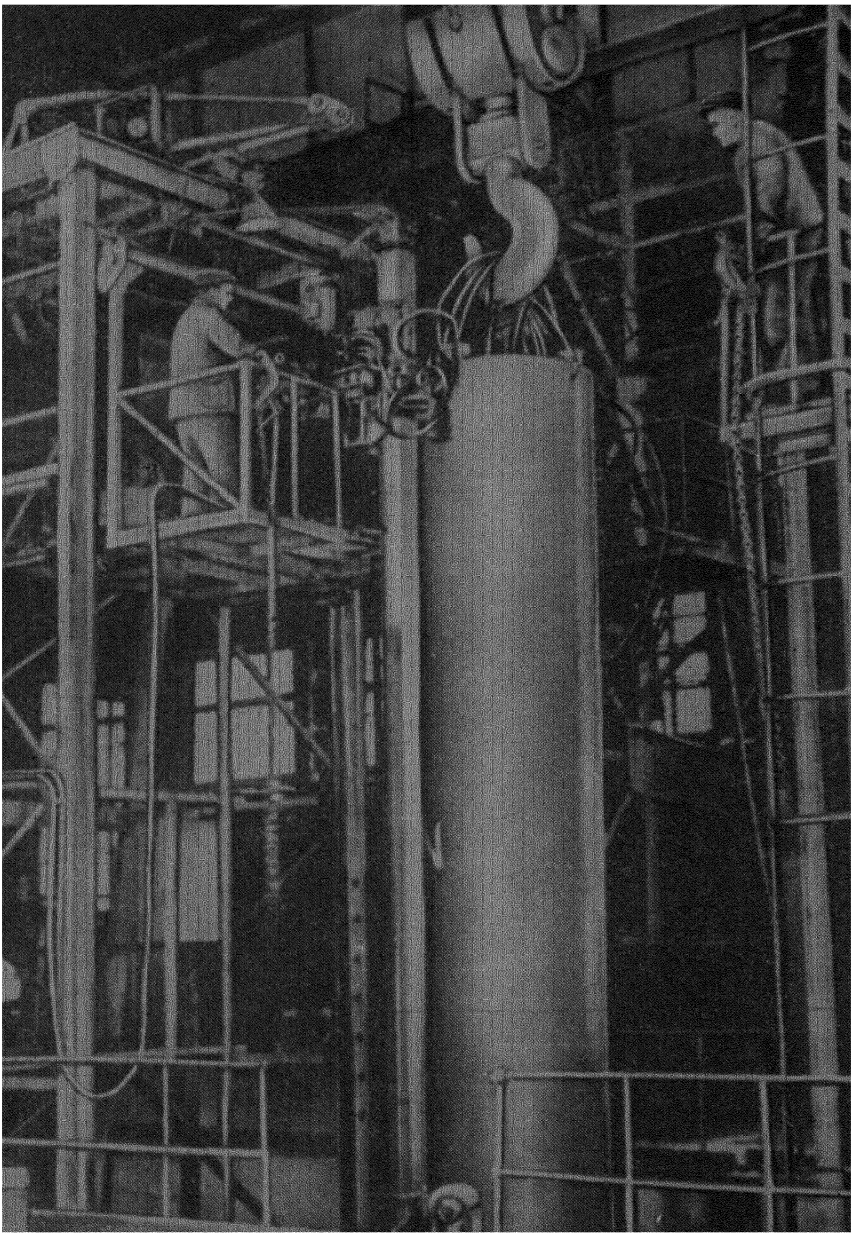

Fig. 227. Welding of two longitudinal seams.

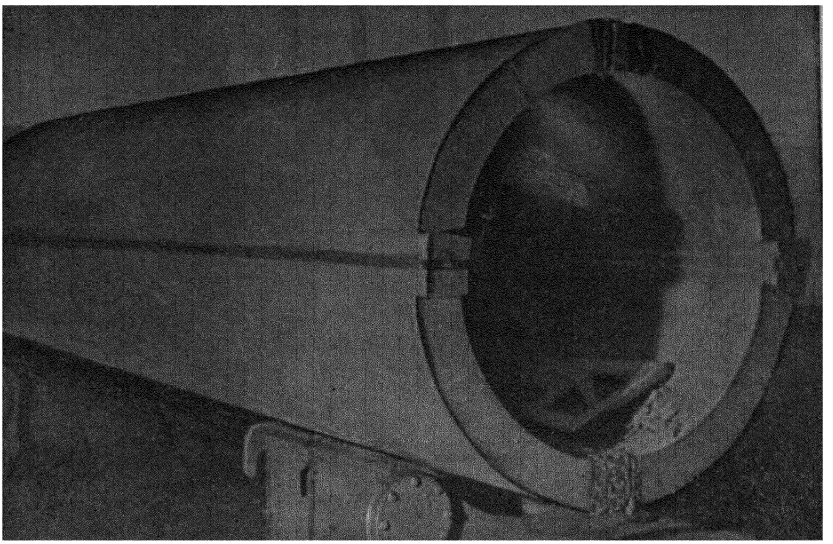

Fig. 228. Shell with two longitudinal seams welded by the electric slag process.

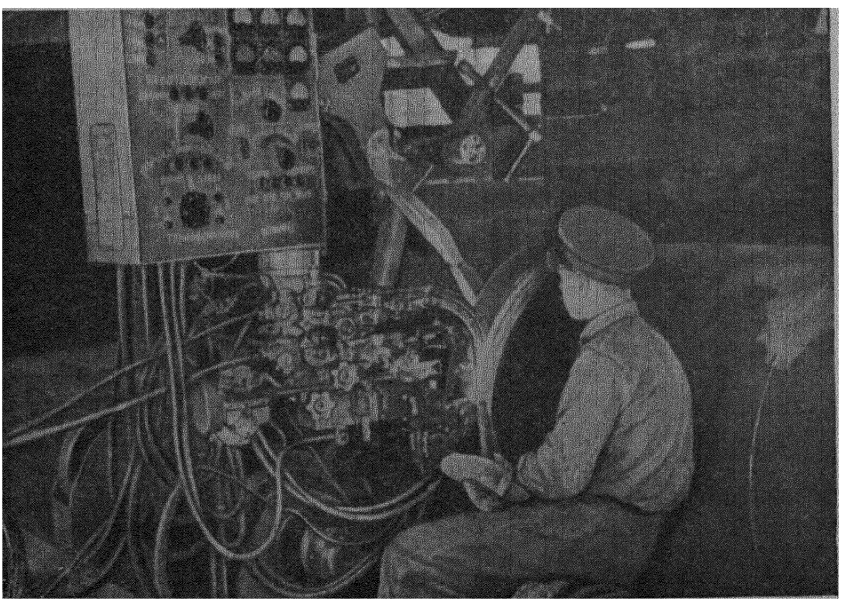

Fig. 229. Welding a girth seam.

slag process is given in Table 86. When a boiler is more than 7 m long, it is made up of two long shells which are joined together by a butt girth weld made by the electric slag process. To this end, operation No. 8 (Table 86) is followed by the line-up of the two halves.

The stresses setting in in slag-welded longitudinal and girth seams are discussed in Chapter V.

Work is under way to adapt electric slag welding to the construction of cylinders from two pressings 11 or 12 m long, pressed from whole plates. The two vertical seams of the drum will be welded simultaneously over the whole length on a special unit. All longitudinal and girth seams of a welded cylinder are inspected by the ultrasonic method and with gamma-rays, using powerful cobalt sources.

Table 86

Nos.	Operation	Floor or station	Equipment
1	Acceptance and inspection of plate	Blanking floor	Rack
2	Cutting to size and inspection	Ditto	Automatic gas cutter
3	Transfer into furnace and heating to 1,050° C	Press station	Chamber furnace with draw-out hearth
4	Pressing	Press station	8,000 ton hydraulic press
5	Trimming of edges to size	Flame-cutting floor	Automatic gas cutter
6	Assembly of shell from two pressings	Assembly floor	Roller bed, welding transformer
7	Simultaneous electric slag welding of two longitudinal seams	Longitudinal seam welding station	Special unit and A-372 apparatus
8	Squaring	—	Automatic gas cutter or lathe
9	Assembly of shell and heads	—	Roller bed
10	Electric slag welding of girth seams	—	Circular seam welding unit, A-460 apparatus
11	Removal of line-up tools and scale	—	Roller bed
12	Inspection	—	Ultrasonic and gamma-rays
13	Repair of defects	—	Roller bed
14	Marking out for drilling	—	Ditto
15	Drilling of holes for pipes	—	Drilling machine
16	Welding of pipes	—	Automatic welding machine for pipe connections
17	Heat treatment of drum	—	Chamber furnace
18	Hydraulic tests	—	Special equipment

4. Heat Treatment of Thick-walled Boiler Drums and High-pressure Vessels

The automatic multipass arc welding of boilers in the downhand position involves the following types of heat treatment: (1) preheating; (2) concurrent heating; (3) tempering immediately after welding; (4) normalising of longitudinal seams after welding; and (5) single or double tempering of girth seams after welding.

Preheating is carried to 250° C; concurrent heating, to 250°; tempering at 670° with the workpiece held in a furnace for two hours and cooled in the air; normalising at 900 or 910° with the workpiece held for 45 min and cooled in the air.

In electric slag welding, the heat treatment of a workpiece is greatly simplified: there is no preheating or concurrent heating, or immediate tempering upon welding. These three types of heat treatment are necessitated by the danger of cracking during arc welding and cooling. In electric slag welding, this danger is ruled out, as the welding speed is low and the heat input per unit length is insignificant. Besides, the molten slag performs a kind of preheating when it comes in contact with the edges of the workpiece. Consequently, only post-welding heat treatment has to be employed. This heat treatment is specified by the Boiler Code and is applied so as to (a) relieve residual internal stresses and (b) refine the grain of the weld metal and the near-weld zone.

Residual internal stresses may be relieved by tempering from 650 to 670° C.

There is no need for heat treatment to improve mechanical properties, for with the wire and flux properly selected (see Chapter VIII), the mechanical properties of the weld metal will be high enough.

No final conclusion has been reached as yet concerning heat treatment for refining the metal structure of the weld and near-weld zone. As will be recalled, electric slag welds show a pronounced coarse-grained structure. The effect of open-grain structures on the service life of a welded joint under the operating conditions of a boiler, i. e., at high pressures and temperatures, has not been studied adequately. There is no indication that the coarse-grained structure of the weld metal adversely affects the performance of welded joints or impairs their mechanical properties with time. All the same, there is a large body of expert opinion claiming that open-grain structures in the welds of boilers are undesirable, as they may presumably give rise to alkaline brittleness. Laboratory studies have established that electric slag welds are more resistant to alkaline brittleness than welds made by the automatic multipass arc process. Although boilers with multipass arc welds have operated trouble-free for many years there is no similar experience as regards boilers fabricated by the electric slag process. Therefore, it is advisable to

retain, for the time being, heat treatment in boiler-making so as to improve the metal structure of the weld and near-weld zone, notably to refine it. This purpose may be served by normalising from 900 or 920° C.

Before 1956, boilers made by the electric slag process were given the following post-welding heat treatment: (a) normalising at 920-

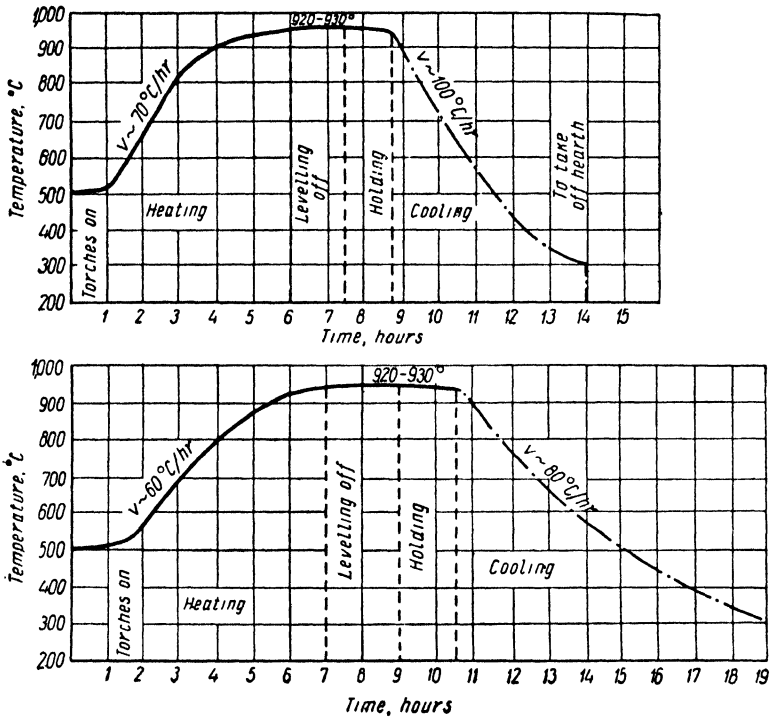

Fig. 230. Heat treatment of ТП-230 boiler drum welded by the electric slag process:
a — small drum; *b* — large drum.

930° and cooling to 200° on the draw-out hearth, and (b) tempering at 650° and colling on the draw-out hearth.

Table 87 illustrates the mechanical properties of welded joints made in 70 cylinders with walls 110 mm thick after various heat treatment.

As follows from Table 87, specimens normalised without subsequent tempering show a somewhat higher strength than specimens which were both normalised and tempered. The ductility of the welded joints is high in both cases. The mechanical properties are superior to those stated in the relevant specifications (yield point

$\geqslant$24 kg/sq mm; ultimate strength $\geqslant$ 44 kg/sq mm; impact toughness $\geqslant$ 8 kgm/sq cm; bending angle, 100°).

For the reasons given above, it has been possible to dispense with tempering after normalising. Tempering has only to be employed when normalising is to be followed by machine-straightening or by a large amount of welding work (a large number of pipe connections are welded or much repair work is done).

The conditions of heat treatment adopted at the present time are given in Fig. 230.

Table 87

Heat treatment	Yield point, kg/sq mm	Ultimate strength, kg/sq mm	Reduction of area, per cent	Impact toughness, kgm/sq cm	Bending angle, deg
Normalising and tempering	27.7-32.3 29.8	43.3-50.7 46.3	47.4-66.2 57.8	11.2-20.7 16.5	156-180 179
Normalising without tempering	29.8-35.9 31.9	47.8-55.5 50.9	42.2-64.4 57.2	11.8-21.7 16.3	180-180 180

5. Distortions of Boilers Due to Heat Treatment in Gas-fired Furnaces and Their Control

In normalising, a shell is heated to 920 or 950° C. This appreciably distorts the shape of its cross section. Furthermore, the shell is also distorted along the axis. An idea of the distortion due to heating may be deduced from the data obtained for a shell 6 m long with an inside diameter of 1.3 m and a wall 90 mm thick. After sizing on rolls, the shell was reheated to the normalising temperature in a furnace. The measurements upon sizing and reheating in a furnace to 950° C are tabulated in Table 88.

Table 88

Distortions due to normalising					
Points of diameter measurement spaced 1 m apart along shells	1	2	3	4	5
Changes in vertical diameter, mm	−17	−10	−11	−12	−8
Changes in horizontal diameter, mm	+15	+ 9	+ 9	+ 9	+5

Prior to heating, the sized shell had a negative out-of-roundness not exceeding 6 mm. After heating, the out-of-roundness became

positive, reaching 13 to 19 mm and even 28 mm in some places, which is in excess of tolerances on out-of-roundness (7 mm).

It should be borne in mind that a distortion of this magnitude is dangerous only when it cannot be eliminated during normalising or after heat treatment. When boilers are made from roll-formed blanks, normalising can be combined with hot sizing. In this way, distortion of the shell is eliminated. This is not the case, however, when boilers are made from pressings. The sizing operation in this case is redundant, and the distortion brought about by heating is not eliminated.

To determine distortion, a drum 12,000 mm long, 1,300 mm ID and 40 mm wall thickness was mounted on cast-iron supports inside the furnace at 600°C. The furnace was brought up to the normalising temperature in 5.5 hours at the average rate of 80° per hour. The drum was held at the normalising temperature for 3.5 hrs. In the range 430-650° C, the drum was allowed to cool on the furnace hearth at the average rate of 120 to 150° per hour. Upon removal from the furnace, the drum was taken off its supports at 200° C eight hours later. The measurements of the drum before and after normalising showed the following:

1. Prior to normalising, the drum had a sag and an ovality (the vertical diameter was 8 mm larger than the horizontal one).
2. After normalising, the drum buckled. The total flexure was 31 mm.
3. Upon normalising, the horizontal diameter was 12 to 14 mm longer than the vertical one.

Another drum 11,400 mm long with a wall 70 mm thick and with an inside diameter of 900 mm was laid on a sand bed and held in the furnace under the same conditions as the first one. It had been expected that the sand bed would equalise the load of the drum on the furnace hearth. Though the ovality of the drum proved insignificant, the flexure reached 30 mm. The drum buckled upwards, which might be attributed to the fact that the ends of the hearth had drooped while its middle buckled and that the drum had been heated unevenly: its bottom, which had been insulated with sand, had received less heat than its top.

To straighten it, the drum was reheated, being placed on the cast-iron supports of the furnace hearth so that it bore on the two outer supports. The drum was placed with the buckle up. During normalising, the drum sagged under its weight to come to lie almost evenly on all the supports.

To control the axial flexure brought about by all the preceding operations—hot pressing, flame cutting and electric slag welding—the drum should be laid on the hearth so that the distortion due to normalising would oppose the previous bending of the drum. However, this measure will not eliminate the distortion completely.

The ovality of drums with welded-on heads may in principle be controlled by means of inside mountings and struts of cast iron or refractory material. However, this is a labour-consuming method.

At the Barnaul Boiler-Making Factory it has been suggested to normalise welded vessels while maintaining an elevated pressure inside them. The drum to be normalised is placed on suitable supports, while mountings are spaced 700 to 900 mm apart along the drum so that the outer mountings fit closely to the girth seams joining together the shell and heads. Excess pressure within the drum builds up due to its being hermetically sealed. The heating of a sealed drum to 950° C results in an excess pressure of 3.2 atm (gauge) due to the expansion of air alone. Before sealing the drum, some 3 to 4 kg of charcoal or 6 to 8 kg of firewood is placed inside it. In this way, the formation of scale on the inside is prevented, and the pressure within the drum is further increased by the evolution of carbon monoxide. To control the inside pressure, a thick-walled steel tube 15 to 20 mm in diameter is welded into the plates covering the manholes in the drum. Outside the furnace the tube terminates in a coiler which is placed in a water-filled vessel. The open circuit of the tube is attached to a Tee piece fitted with a cock and a pressure gauge.

A pressure of 2 kg/sq cm and higher arrests the increase in ovality, while a pressure of upwards of 4 kg/sq cm may prove sufficient for sizing purposes. 3 kg/sq cm is considered the optimum pressure.

6. Economic Gain and Technical Advantages

The application of electric slag welding to boiler-making has given a sizeable economic gain.

From Table 89 it will be seen that electric slag welding has made redundant 50 per cent of the basic operations. At the same time, production floor space has been better utilised.

Table 90 compares technically and economically multipass submerged arc welding with single-pass electric slag welding as employed at the Taganrog Boiler-Making Factory in the fabrication of high-pressure vessels with walls 90 mm thick.

Consumption of flux has been reduced to one-twentieth of what it is in the arc process, while the weld time and power consumption have been halved.

With fewer operations to be performed, the distance covered by a boiler shell in the process of fabrication has been reduced by a factor of 2.5 or 3. The crane work involved has been halved. The substitution of flame cutting for planing has made it possible to dispense with a purpose-made planer.

Heat treatment is a labour- and money-consuming operation. It involves considerable capital outlays for the construction of large reheating furnaces, gas producers, etc. The dwell of a part in a furnace during a single heat-treatment operation may be anywhere from

Table 89

Old manufacturing method using multipass submerged arc welding	New manufacturing method using single-pass electric slag welding
1. Acceptance, marking out and cutting of plate	Retained
2. Heating of plate in furnace	Ditto
3. Bending or pressing of plate into blanks	Ditto
4. Marking out and trimming of longitudinal edges	Ditto
5. Machining of shaped edges	Left out
6. Assembly of shells	Retained
7. Heating for welding	Left out
8. Welding of first longitudinal seam on outside after welding manually the sealing weld on the inside, with concurrent heating	Simultaneous single-pass electric slag welding of two longitudinal seams without concurrent heating
9. Tempering of second longitudinal seam under same conditions	
10. Tempering	Left out
11. Inspection of outside seam	Retained
12. Starting of inside longitudinal seams	Left out
13. For plates 100 mm thick, completion of outside longitudinal seams with preheating	Left out
14. Tempering	Ditto
15. Overall inspection of longitudinal seam	Ditto
16. Bevelling of edges	Preparation of edges into open square groove
17. Assembly of shells or of shells and heads	Retained
18 Heating for welding	Left out
19 Welding of outside seam	Retained
20. Heat treatment	Ditto
21 Preparation of inside seam for welding	Left out
22 Starting of inside seam	Ditto
23 For plates more than 100 mm thick, completion of outside seams with preheating	Ditto

Table 90

Welding variables	Unit	Multipass submerged arc welding	Single-pass electric slag welding
Weld time per unit length of weld	per cent	100	44
Consumption of power per kg of deposited metal	kw-h	1.96	1.05
	per cent	100	53
Flux consumption per kg of deposited metal	kg	1.07	0.05
Melting rate	g/a-hr	19.6	36.5

9 to 18 hours, the cost of one hour of furnace time being about 400 rubles. In other words, the reduction of heat treatment by one operation may save some 5,000 rubles on the average. The old manufacturing method included more than ten types of heat treatment. In the new method, their number has been reduced by seven. The simultaneous welding of two longitudinal seams sharply reduces labour requirements. Table 91 illustrates the efficiency of electric slag welding as applied to the fabrication of pressed-welded high-pressure cylinders for heavy hydraulic presses.

Table 91

Gain and source	Unit	Saving
Economic gain due to change-over from forged to pressed-welded structure . . .	Rubles per cylinder	95,000
Economic gain due to change-over from multipass submerged arc welding to single-pass electric slag process	Ditto	24,000
Shorter production time per cylinder 4,000-4,700 litres capacity	Days	From 31 to 15 From 60 to 30
Reduction in department burden and factory overhead due to shorter production time	Per cent	50
Less flux consumed in electric slag welding	Rubles per cylinder	4,300
Reduced amount of heat treatment	Ditto	6,000
Reduced capital outlays	Ditto	27,000
Increased output per square metre of production floor space	—	1.95 times

By the new method employing electric slag welding, it takes 482 hours to manufacture a 10,000 litre cylinder, while the Armstrong-Vickers Ltd. make a similar cylinder in about 1,600 hours. The fabrication costs of forged blanks for a drum was 480,000 rubles, while pressed blanks cost 220,000 rubles.

With less time spent on the fabrication of boilers and high-pressure vessels, a boiler-making factory may operate smoothly and its fortnight and monthly plans fulfilled without rush work.

All in all, electric slag welding, as applied to boiler making, appreciably increases production rates, improves the quality of welded joints, and sharply cuts down production time and capital outlays on custom-built equipment.

Chapter X

TYPICAL APPLICATIONS OF ELECTRIC SLAG WELDING

The electric slag process has come into wide use in the construction of forging presses, heavy engineering goods, thick-walled barrels, shafts, and a variety of products from heavy sections. The electric slag process has been successfully used to unite parts from heavy rolled sections, castings and forgings. This process has opened up new venues in the making of extremely large hydraulic presses, thick-walled high-pressure vessels and other articles which are next to impossible to produce by any other method. Electric slag welding has affected the manufacture and design of both component parts and final structures.

Before the advent of electric slag welding, forging presses, especially heavy hydraulic machines, were made of large forgings and castings. Some of the castings and forgings could only be made at works equipped with purpose-made presses and hammers and incorporating large foundries with high-capacity cranes. With the electric slag process, Soviet manufacturers have come to turn out heavy engineering goods, some parts of which could not be made even by the biggest works. By way of example, the all-cast head frame of a heavy hydraulic press weighs over 200 tons, and it is a job of work to make such a component.

With the electric slag process, it is possible to design large structures in two or more smaller forged or cast parts and to assemble these by welding. However, this is not always the best proposition. Therefore, its advantages should be weighed in terms of economics in each particular case. The current trend is to replace rolled-welded structures with cast-welded and forged-welded ones. The forged columns of heavy hydraulic presses are being replaced with heavy rolled sections. Cast-welded press heads are giving way to rolled-welded ones. This is an economically sound policy, as appreciably less labour and time is spent to make a structure.

Publications abroad also bear out the advisability of the change-over from cast- to rolled-welded structures. According to foreign sources, parts for forging presses and hammers are much cheaper

to roll and weld—even should manual arc welding be employed—than to cast.

The same applies to other products, such as shafts for hydraulic turbines and turbo-alternators, the frames of rolling mills, etc.

Formerly, the shafts of large hydraulic turbines were all-forged. Electric slag welding has radically changed their design, and currently they are either forged-welded or forged-cast-welded. As a result, the weight of individual component parts has been sharply reduced, as has the amount of labour involved. At present, work is well ahead towards replacing forged shafting by shafts welded from heavy rolled sections, which is hoped to cut down labour requirements and to simplify the fabrication of shafts, as forging—a labour- and money-consuming operation—may then be dispensed with.

The stands of large rolling mills may also be made from castings joined together by electric slag welding. At present, the possibility of making large rolling mill stands from heavy rolled sections is being studied.

Weldments fabricated by the electric slag process may be grouped into four general classes:

(1) Structures welded from heavy rolled sections (rolled-welded structures);

(2) Cast-welded structures;

(3) Forged-welded structures;

(4) Combination structures in which some component parts may be rolled, and some cast or forged.

1. Rolled-welded Structures

The rolled-welded structures currently made by the electric slag process include:

(1) Parts of hydraulic presses;

(2) Thick-walled steel drums (high-pressure boiler drums, cylinders of hydraulic accumulators, etc.);

(3) Tube sheets for boilers, disks for turbo-alternators;

(4) Welded girders (buckstays for open-hearth furnaces, press components, etc.).

Except for parts of hydraulic presses whose fabrication started a relatively short time ago, the above-mentioned structures have been largely welded by the manual, semi-automatic or automatic submerged arc process. In all cases, the edges of workpieces have had to be appropriately prepared for welding. Heavy sections have been joined together by multipass welds, and the articles have had to be repositioned many times during welding so as to avoid angular distortion. Abroad, the current welding practice as applied to heavy-gauge steel is to use multipass welds. In the United States, parts for one heavy hydraulic press, made from steel about 300 mm thick, were welded in 180 passes by the automatic submerged arc process.

The parts had to be repositioned many times so as to control distortion. This technique is labour-consuming and, therefore, economically unattractive, and the difficulties grow with increasing plate thickness.

Rolled-welded structures are mainly made from carbon steel MCт.3 and 22K plate. Because of its usefulness in the fabrication of thick-walled boiler drums (Chapter IX), steel 22K is chiefly made into parts for heavy hydraulic presses, while steel MCт.3 goes into other types of rolled-welded products. The quality of welds

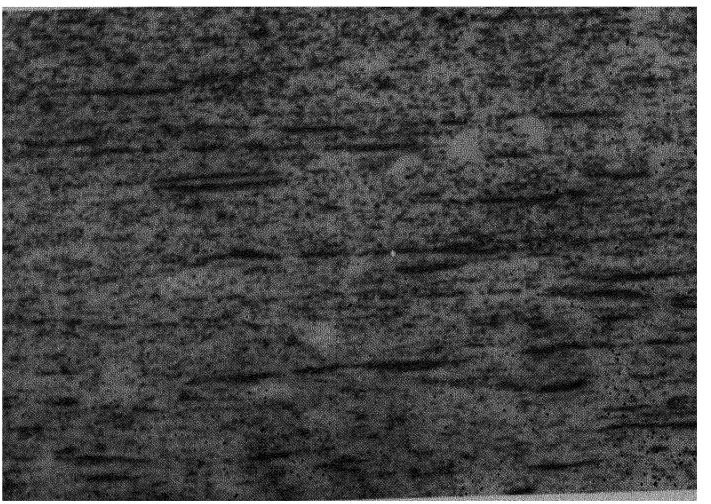

Fig. 231. Baumann replica of steel 22K plate 250 mm thick in the area corresponding to the head of an ingot.

made in steel plate largely depends on the quality of the steel itself. Heavy-gauge and large-size rolled sections have to be made from comparably large ingots. As will be recalled, the larger ingots suffer from ununiform chemical composition throughout their mass, open-grain structure, and lower mechanical properties. This ununiformity in the properties and structure of the steel, especially variations from area to area, may have an adverse effect on the quality of welded joints.

Studies of variations in the chemical analysis of steel 22K (250 mm thick) revealed a pronounced segregation of sulphur in the form of sulphide streaks (Fig. 231), which is usually observed in rimmed steels only in the area of plate corresponding to the top portion of ingots. In the other areas less sulphur was segregated, and its segregation was progressively less noticeable towards the edges of the

plate. In the ingot-bottom portion of plate sulphur was distributed practically uniformly, as usually is the case with killed steels. It should be noted that no sulphide streaks were, as a rule, observed in steel 22K from 70 to 90 mm thick. The chemical analysis of drillings from various areas of a steel 22K plate indicated that: (1) carbon, silicon and manganese were distributed throughout the plate rather uniformly. In some cases, more carbon was concentrated in the middle of the plate. (2) Sulphur and phosphorus were distributed less uniformly than C, Si and Mn. In some cases, sulphur content in the middle of the plate exceeded its content elsewhere in the plate by 0.007 to 0.01 per cent.

Table 92 gives the mechanical properties of specimens cut from the ingot-head portion of plate. As can be seen from the table, the metal was of satisfactory quality.

Table 92

Specimens cut from	Yield point, kg/sq mm	Ultimate strength, kg/sq mm	Elongation, per cent. $l=5D$	Reduction of area, per cent	Impact toughness, kgm/sq cm
Middle of ingot-head portion	29.3-30.3 29.8	48.4-49.5 48.8	26.8-27.0 26.9	44.4-47.0 45.3	7.3-9.1 8.2
Edges of ingot-head portion	28.7-29.7 28.7	49.4-49.7 49.6	27.6-29.8 28.7	53.7-55.2 54.2	—

An example of rolled-welded structures made from steel plate by the electric slag process can be provided by parts for hydraulic presses.

These parts (crossheads, bedplates and columns) are flat-plate structures made up of several elements 130 to 270 mm thick.

The steel plate that goes into them is first hot-straightened in a press so that its deflection does not exceed 5 or 6 mm. Upon straightening, the plate is laid out: outlines of the parts are drawn on it, holes are marked, etc. The laid-out plate is then flame-cut to size. The edges of the parts to be welded are machined on a planer or a milling machine. Before the parts of a crosshead are assembled, holes are drilled in them and studs are welded on by automatic arc welding machines. The holes are drilled with liberal allowances for changes in the distance between the holes on mating parts upon welding

A station for fitting up and welding press parts is a plating block with supports mounted on it (Fig. 232). A support is a substantial

welded structure with two side guides receiving the part to be welded. The part is clamped in a support in a strictly vertical position by means of two screws. As Fig. 232 shows, a press crosshead is assembled on six supports. Each part of the crosshead is placed on two supports by a crane and secured in place by bolts. The desired spacing between the parts to be welded is set by means of spacers. The clearance is made to taper as a precaution against uneven transverse contraction in electric slag butt welds. At the bottom of the

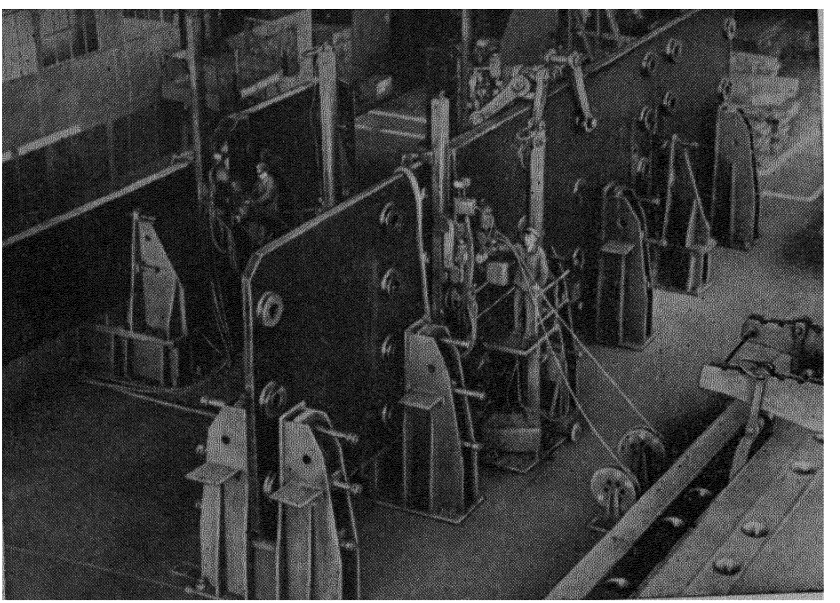

Fig. 232. Floor for welding parts of hydraulic presses by the electric slag process.

joint, the clearance is 29^{+2} mm, while at the top the gap depends on the height of the joint. As has been found empirically, the difference in the gap width should be about 3 mm per metre of weld. For a crosshead 3,800 mm high, the gap at the top of the joint is 40 to 42 mm. To obtain a tapering gap, the outer elements are slightly inclined in the plane of the crosshead. For this purpose, the middle plate and the adjoining edges of the side plates are set somewhat higher than the outer edges of the side plates by means of shims. The shim for the middle plate is so chosen that the gap at the top is 40 to 42 mm. The parts thus assembled for welding are held in place by the clamps of the supports. No fitting-up clamps are employed usually for the plates of crossheads

Upon assembly, starting and finishing tabs are tack-welded at the bottom and top of the joint so that the weld may be started and completed outside the workpiece.

The requirements for the fit-up of a crosshead are as follows: (1) the width of the gap should not differ from the nominal one by more than ±2 mm; (2) the edges should have an offset of not more than 4 mm; (3) the edges to be traversed by the copper moulding shoe should be filed to metallic lustre.

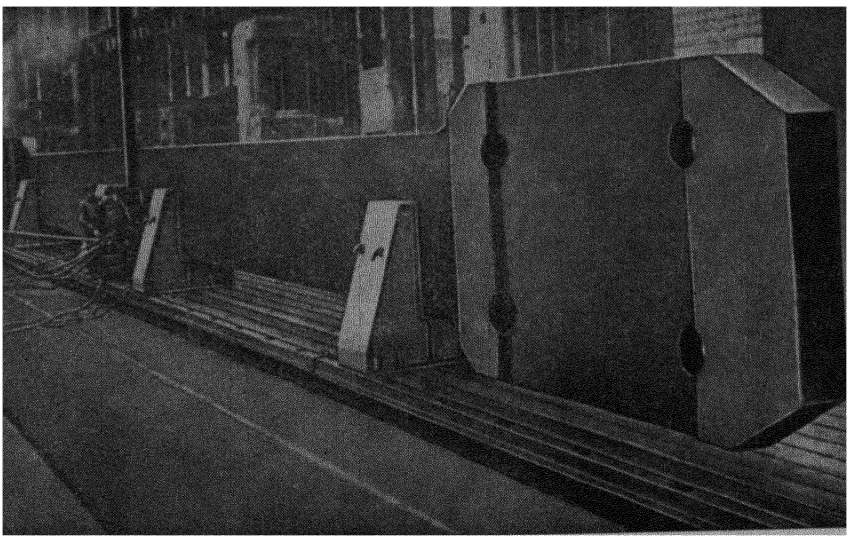

Fig 233. Column of a hydraulic press being welded by the electric slag process.

The butt welds on hydraulic press parts are made by the electric slag process by means of an A-372M or an A-372P unit. The unit may be set up in the welding position by means of an overhead travelling crane or a jib and electric hoist. Fig. 233 shows a column for a hydraulic press being welded by the electric slag process.

The electric slag welding of steel 22K up to 270 mm thick uses Св-10Г2 wire and АН-8 or ФЦ-7 flux. Upon heat treatment (normalising and tempering), welded joints have the following mechanical properties: ultimate strength, at least 44 kg/sq mm; yield point, at least 22 kg/sq mm; elongation, at least 18 per cent; and impact toughness, at least 6 kgm/sq cm. The welds made with other grades of electrode wire (Св-08А, Св-08ГА, Св-10ГС, etc.) have lower mechanical properties and show a tendency to hot cracking. Therefore, they may not be recommended for welding steel 22K plate.

The parts for hydraulic press 200 to 270 mm thick were butt-welded with two electrodes, using 480 to 500 a at 48 to 54 v and an electrode speed of 200 to 220 m/hr. The dwell of the electrodes at the moulding shoes was 5 sec, and the rate of weaving motion was 37.6 m/hr. The depth of the slag pool was maintained at 50 to 55 mm, while the electrode spacing was 95 to 98 mm for plate 200 mm thick, and 120 to 123 mm for plate 250 mm thick.

The mechanical properties of the welds and welded joints both before and after heat treatment are given in Table 93, while Table 94 shows their chemical analyses.

Static mechanical tests (Table 93) as well as tests for fatigue strength (Chapter IV) have shown that electric slag welds are comparable with the parent metal, steel 22K.

The welded joints in the parts of hydraulic presses are thoroughly inspected. According to the existing regulations, specimens for mechanical tests and metallographic examinations are drilled out of crossheads and bedplates at the middle of the weld. Besides, welded joints are given visual inspection and checked by means of an ultrasonic fault detector. Welds with a large number of cracks, poor fusion and penetration, and large slag inclusions should be completely removed and made anew. The same rule applies to the defects in welds interrupted for any reason and then restarted. These welds should be cut out and made anew from beginning to end. It should be recalled that in the fabrication of boiler drums of steel 70 to 90 mm thick welds may be restarted after stoppage, provided the weld is repaired where dropped.

Welds are inspected for quality and the defects revealed are repaired before the welded components are heat-treated. The crossheads and bedplates of hydraulic presses are given heat treatment in a furnace (normalising and tempering). The columns of hydraulic presses cannot be heat-treated in a furnace because of their large size. Therefore, heat treatment is given to columns divided into two halves. After the two halves have been welded into a column, the last welded joint is given local heat treatment—normalising and tempering by means of suitable induction heating equipment. After heat treatment, the press components are machined.

The fabrication of rolled-welded structures, such as tube sheets, disks for turbo-alternators, buckstays for open-hearth furnaces, etc., is much the same as the construction of parts for hydraulic presses.

The techniques and procedures for the electric slag welding of high-pressure boilers and cylinders for hydraulic accumulators are described in detail in Chapter IX.

Tube sheets are disks 70 to 80 mm thick and up to 2,200 mm dia made of killed steel Ст. 3 or Ст. 4. Tube sheets are welded by the electric slag process on the A-372M specialised welding outfit. The outfit (Fig. 234) incorporates a fixture fitted with moving wedges for the mounting of a tube sheet by plummet, clamping screws and

Table 93

Metal thickness, mm	Post-welding normalising and annealing	Yield strength, kg/sq mm	Ultimate strength, kg/sq mm	Elongation, per cent $l=5D$	Reduction of area, per cent	Ultimate tensile strength of flat specimens, kg/sq mm	Impact toughness kgm/sq cm	
							weld	open-grain area in near-weld zone
200	No	33.0-35.0 / 34.2	54.0-55.5 / 55.1	23.0-27.5 / 25.0	51.0-65.5 / 57.5	—	3.8-8.9 / 5.9	3.8-8.9 / 6.3
	Yes	34.5-35.5 / 35.0	51.0-52.0 / 51.6	26.5-28.5 / 27.5	62.5-70.0 / 67.0	—	6.4-10.6 / 8.3	9.3-15.2 / 11.5
250	No	31.0-34.0 / 32.1	52.0-53.0 / 52.8	28.0-28.5 / 28.3	65.5-72.0 / 67.9	43.0-49.5 / 45.8	6.8-9.1 / 7.7	4.0-12.1 / 8.1
	Yes	32.0-32.5 / 32.3	51.0-51.5 / 51.3	29.0-32.0 / 31.3	68.5-72.0 / 70.8	45.5-49.0 / 47.6	10.1-13.0 / 11.6	6.1-13.9 / 9.4

Table 94

Metal	Plate thickness, mm	Analysis, per cent							
		C	Mn	Si	S	P	Cr	Ni	Cu
Parent	200	0.26	0.93	0.32	0.027	0.028	0.25	0.06	0.10
	250	0.28	0.70	0.19	0.040	0.020	0.13	0.03	0.08
Weld	200	0.19	1.30	0.17	0.024	0.033	0.23	0.11	0.16
	250	0.17	1.28	0.12	0.031	0.020	0.16	0.10	0.10

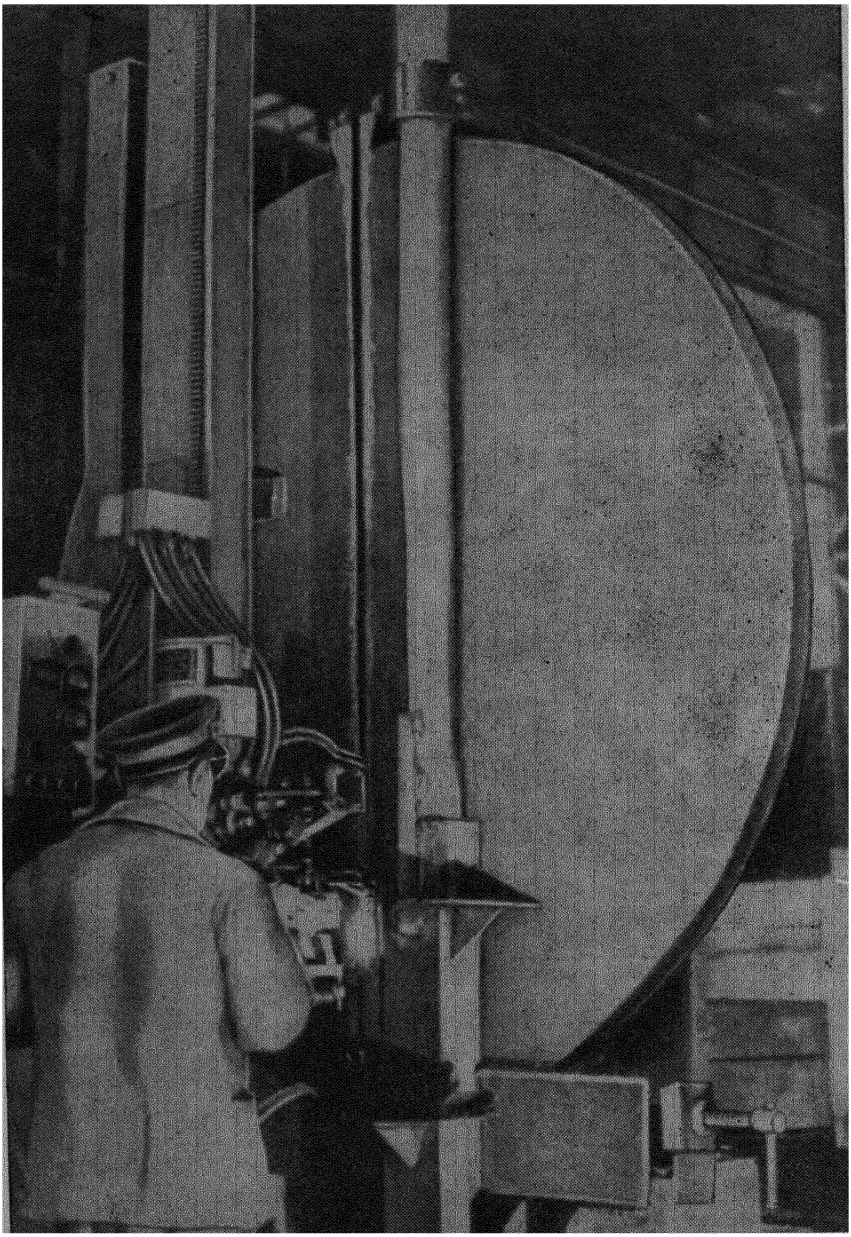

Fig 234. General view of unit for welding tube sheet by the electric slag process.

a rack rail for the welding head. Before fitting up, the edges of a tube sheet are flame-cut for welding and cleaned of slag and scale. Tube sheets are fitted up for welding by means of clamps. The gap is 26 mm at the bottom of the joint, and 30 mm at the top. Use is made of Св-08ГА wire and АН-8 flux.

Welded tube sheets are normalised from 890°. The electric slag welds and joints made in them have high mechanical properties.

The application of electric slag welding instead of automatic multi-pass arc welding to the fabrication of tube sheets has almost trebled the production rate, eliminated the straightening of sheets after welding, and cut down their fabrication costs.

Another example of rolled-welded structures made from plate by the electric slag process is provided by buckstays for open-hearth furnaces. Formerly, they were cut out of solid blanks (Fig. 235), and the wasted metal accounted for 50 to 60 per cent of the ingot weight. By the electric slag process, these buckstays are made from slabs of killed or rimmed steel Ст. 3 or Ст. 4.

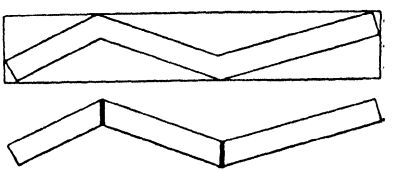

Fig. 235. Buckstay for an open-hearth furnace.

Because of their odd shape, buckstays are welded on a special-purpose welding outfit (Fig. 236). The outfit incorporates a truck which rides a rail track and a type А-372 rail-riding welding apparatus. The frame and rack for mounting the buckstay to be welded are hinged to the truck. For the accurate positioning of the buckstay relative to the welding apparatus, the frame and buckstay together can be swung in or out by means of jack screws.

The selection of electrode wire depends on the chemical analysis of the parent metal (which may be killed or rimmed). For killed steel, Св-08ГА or Св-10Г2 wire may be recommended. Buckstays from rimmed steel should be welded with either Св-10ГС or with Св-10ГС wire in combination with Grade Св-08ГА. These grades of wire coupled with АН-8 flux produce high-quality welded joints.

With the electric slag process, metal consumption in the fabrication of buckstays for open-hearth furnaces has been cut from 11.6 to 7.5 tons per part.

Other types of heavy-gauge structures made currently by the electric slag process include heads for high-pressure boilers, disks for turbo-alternators (Fig. 237), stator parts for large electric machines, etc. These structures are usually made from low-carbon steel plate 60 to 160 mm thick. These articles are fitted up and welded by means of simple devices with which the parts to be welded can be placed and reliably clamped in a vertical position. The welding equipment employed usually is the А-372 apparatus, using АН-8 flux and Св-08ГА or Св-10Г2 wire. With these materials and optimal welding

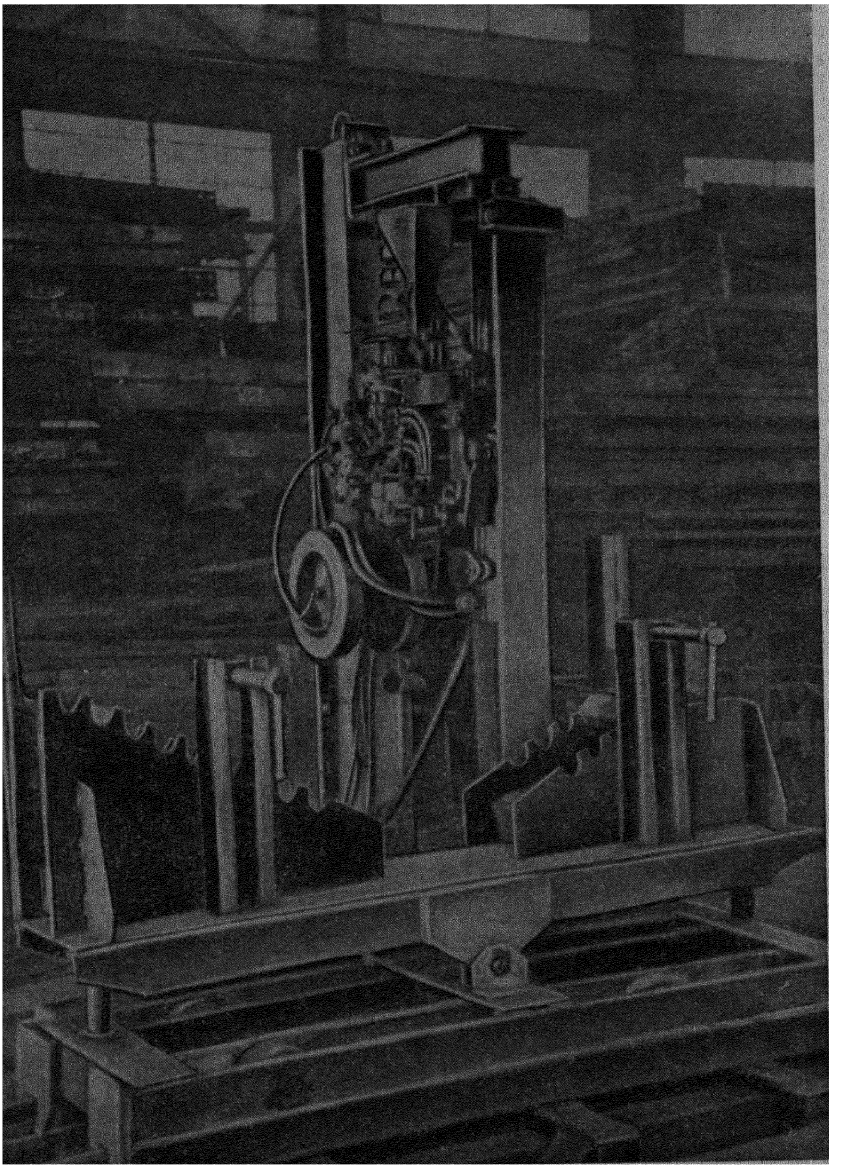

Fig. 236. Unit for welding open-hearth furnace buckstays by electric slag welding.

conditions, the resultant welds and welding joints are of high quality and fully meet the requirements of specifications.

Only critical structures are heat-treated (normalised and tempered). Non-essential components may only be given a temper. In some cases heat treatment may be dispensed with altogether.

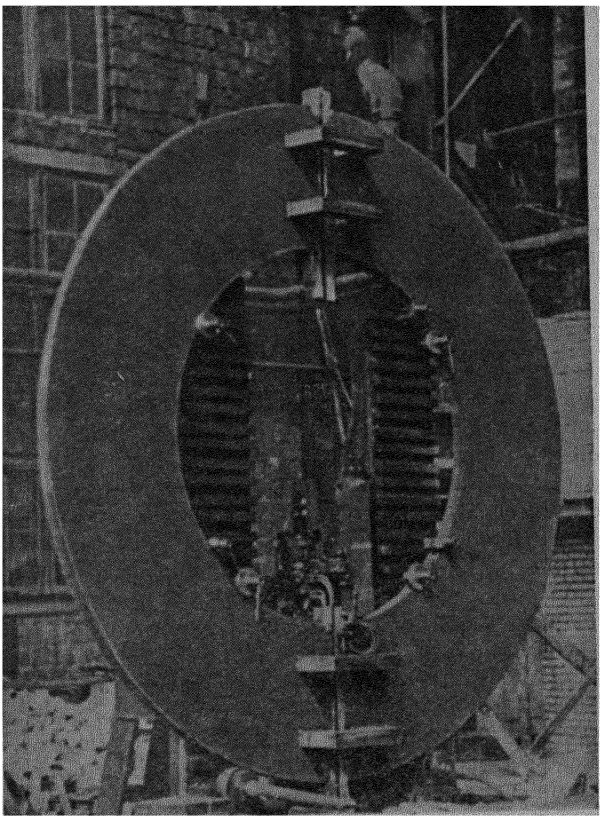

Fig. 237. Turbo-alternator disk welded by the electric slag process.

The fabrication of rolled-welded structures by the electric slag process appreciably reduces production time and costs. For the time being, it is not always possible to assess the economic gain that may be derived from the application of electric slag welding. Where the electric slag process has ousted other welding processes in some applications, such as boiler drums, the resultant savings are not difficult to calculate by comparing the old and new methods. If the electric slag process is used in the manufacture of products which were not

made at all by welding or whose manufacture by welding has become possible only on the basis of the electric slag process, any comparison will only reveal a negligible proportion of the total saving. An example in point is provided by parts for hydraulic presses.

Here are a few facts and figures about the efficiency of electric slag welding. At the Elektrosila Works, the fabrication costs of disks for turbo-alternators 60 to 140 mm thick and 2,200 to 4,800 mm in dia have been cut down by the electric slag process by a factor of 2.8 as compared with automatic submerged arc welding and by a factor of 5.3 as compared with manual welding. At the same time, the cranes now have to handle appreciably less materials, and the output of welded structures per unit area of production floor space has been increased.

At the Volgograd Engineering Works, the change-over from forged rods to rolled-welded rods made by the electric slag process resulted in a substantial saving

2. Cast-welded Structures

As has been noted elsewhere, foundries are unable at times to turn out large castings for heavy forging and metal-making equipment. In these cases, large components are designed in two or more smaller parts which are then assembled by electric slag welding. The insufficient capacity of foundries is not the only reason for this. There are castings which are difficult to make because of their odd shape, and their fabrication entails a high rejection rate. In some cases, the substitution of smaller for larger castings makes it possible to employ machine moulding, reduce the amount of machining on special-purpose machine tools, distribute the assignment among a larger number of work stations, and cut down production time.

Cast-welded parts fabricated by the electric slag process include rolling mill stands, heads for heavy hydraulic presses, crossheads for forging presses, roller tables, etc.

In most cases, cast parts for engineering goods are made of carbon steels 25Л and 35Л. The chemical analysis and mechanical properties of these steels are given in Table 95.

The casting properties of steel 35Л are better than those of steel 25Л. In fact, this is why steel 35Л is widely employed to obtain large castings, although its higher strength also is of importance. On the other hand, steel 25Л with a lower carbon content has a better weldability. When designing the cast parts to be welded by the electric slag process, account should be taken of the peculiarities of this process. Apart from the general requirements for products welded by the electric slag process (straight seams, no projecting parts standing in the way of the welding equipment and moulding shoes, etc.), cast parts have to meet some additional requirements, i. e., proper gating and risering relative to the surfaces to be slag-welded,

absence of abrupt changes in section and sharp angles, especially near the joints.

There should be no risers or gates on the surfaces to be welded. As will be recalled, the distribution of the constituent elements, especially carbon and sulphur, in the areas where risers and gates were removed from castings, is uniform. In some cases, the sulphur and carbon content in such areas may be several times their average content throughout a casting. This is why risers and gates should be positioned far from the surfaces to be joined.

An example of cast-welded structures made by the electric slag process may be provided by rolling mill stands. When all-cast, such stands may weigh up to 115 tons; the stands are moulded manually, and they have to be roughed and finished on special-purpose machines.

A cast-welded stand is an O-shaped frame made up of four parts: the top, the bottom, and two sides (Fig. 238). As a rule, each stand has four butt joints between the top and bottom on the one hand, and the two sides, on the other. At the joints, the cross section of a stand may be from 450 mm square to 800 mm square or more. For example, the cross section of the bottom part of the stand for the Asha Works rolling mill is 780×750 mm, and that of the top, 750×725 mm. The total net weight of the stand is 90 tons.

The parts of a stand are made from steel 25JI. After casting and fettling, the parts are machined, the working surfaces are roughed, while the surfaces to be welded are planed or milled.

The stand to be welded is fitted up on a plating block which has edge supports for stand parts. The parts are fitted up with a tapering gap between them. At the bottom, the gap is 30 to 32 mm, while at the top it is 33 to 35 mm. Starting tabs

Table 95

Steel grade	Chemical analysis, per cent					Mechanical properties, minimum				
	C	Mn	Si	S	P	Yield strength, kg/sq mm	Ultimate strength, kg sq mm	Elongation, per cent $l=5D$	Reduction of area, per cent	Impact toughness, kgm/sq cm
25JI	0.23-0.3	0.5-0.8	0.15-0.37	Up to 0.05	Up to 0.05	45	24	19	30	4
35JI	0.32-0.4	0.5-0.8	0.15-0.38	ditto	ditto	50	28	—	—	—

80 to 100 mm long are provided at the bottom of the joint. The side tabs are 60 to 80 mm thick, and the bottom tab, 40 to 50 mm thick. The tabs are continuous-welded to the stand parts manually by an open arc. The finishing tabs, which are a continuation of the weld, are attached at the top of the joint. After welding, the starting and finishing tabs are cut off by an oxy-acetylene torch, as are the beginning and end of the weld. Instead of starting and finishing tabs, the stand parts should preferably be cast with appropriate bosses comparable in size to the tabs.

After the four butt joints have been fitted up, backing-up strips are installed. The backing-up strips may be either of the water-cooled copper type or fusible steel strips. The backing-up strips may be continuous on one side and made up of separate lengths from 150 to 200 mm (Fig. 239) on the other side, so as to provide a convenient

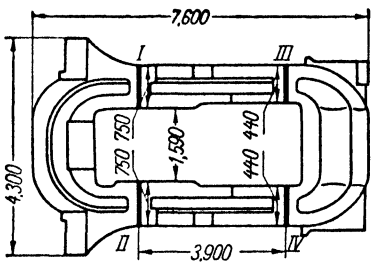

Fig. 238. Sketch of a rolling mill stand; *IV-I*—butt welds.

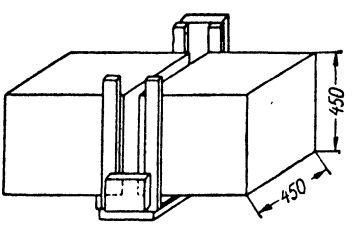

Fig. 239. Butt weld with composite backing strips.

check on the progress of the weld. After the groove has been filled with electrode metal, another length may be added to the intermittent backing-up strip. In the case of copper strips, they are held tight to the edges by means of clamps and wedges. Fusible steel strips are held in place by tacks. After welding, these strips are removed by an oxygen torch. Preference should be given to copper backing-up strips.

The butt joints of stands are welded with plate electrodes and an A-480 welding apparatus, which may be replaced by an A-372P set incorporating an additional unit. In order to control distortion and to relieve internal stresses, the welding of two butt joints (top or bottom) at a time is strongly recommended.

The electric slag welding outfit for the butt joints of stands may be either simplified or specialised. The former is suitable for cases where stands are manufactured in small numbers, while the latter is intended for the quantity production of stands.

A simplified welding unit is a metal frame on which are mounted two A-480 welding sets. The distance between them corresponds to that between the joints to be welded. The frame and welding heads are installed on supports arranged on either side of the plating block

(Fig. 240). The supports should be high enough for the frame and welding units to be slightly above the projecting parts of the fitted-up stand. The frame and welding heads are positioned over the joints by means of an overhead travelling crane which also moves the frame and welding heads in position for the welding of another pair of butt joints on the stand. The welding heads are made fast to the frame; therefore, the frame should be so positioned that each welding unit is in the desired position over the joint to be welded. Their position is checked by a plummet.

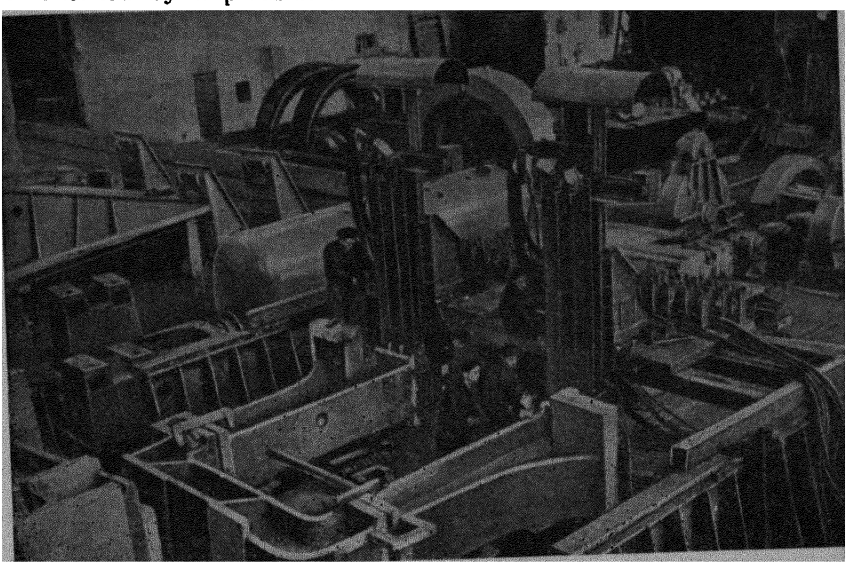

Fig. 240. General view of a welding unit with two A-480 welding apparatus.

The positioning of welding sets over joints is much simpler in a specialised welding unit. The diagram and description of such a unit are given in Chapter VI. The floor for the fit-up and electric slag welding of stands has two stations served by one welding outfit. This is a gantry-type outfit travelling on the rail track laid on either side of the welding jigs. The gantry is driven by an electric motor and has guides for two trucks carrying A-480 welding heads. The other equipment provided includes two ТШС-3000-3 transformers and control boxes. In this outfit the welding heads can be easily positioned for welding. The gantry is manoeuvred so that the welding heads are above the respective joints. The distance between the welding heads varies with the width of the stand to be welded, and may be changed by moving the trucks on the guides. After the first pair of joints are welded, the gantry and welding heads are moved to the

Table 96

Condition of weld metal and welded joint	Yield strength, kg sq mm	Ultimate strength, kg sq mm	Elongation, per cent $l=5D$	Reduction of area, per cent	Ultimate strength of flat tension specimens	Impact toughness, kgm sq cm	
						weld	coarse-grained area
As welded	34.5-35.6 / 35.4	58.3-59.0 / 58.7	14.7-20.0 / 17.0	21.2-35.6 / 28.7	50.7-53.2 / 51.8	2.9-5.2 / 4.4	2.3-5.4 / 4.1
Normalised and tempered	36.6-38.3 / 37.3	59.4-60.7 / 60.0	23.3-30.3 / 27.3	61.5-67.5 / 63.7	48.7-55.6 / 51.9	7.6-5.1 / 8.3	9.5-10.0 / 9.3

next pair of joints. While the welding heads are set up to make welds at the first station, another stand may be fitted up for welding at the other station. In this way, the time required for the setting up and positioning of welding sets is reduced, and the setting up procedure is simplified. At the present time, stands are slag-welded with plate electrodes, as commercial practice has confirmed its superiority to multielectrode welding.

Electrodes for steel 25Л are made of low-alloy steel 10Г2 or МС-1. The considerations governing the selection of steel grade for plate electrodes are as follows. Steel 25Л contains up to 0.30 per cent carbon. For full-strength welds to be obtained, the electrodes should be of a similar chemical analysis with the parent metal, i. e., they should have an increased carbon content. Or they can be made from low-alloy steel in which the carbon content is considerably lower, and the desired strength can be obtained by adding alloying elements, such as manganese, silicon, etc. Electrodes with an increased carbon content are undesirable as hot cracks may develop in the weld. Therefore, preference has been given to electrodes of steel with a decreased carbon content.

The size of plate electrodes varies with the size of the joints to be welded. For joints with a cross section of 780 by 750 mm, use is made of elect-

rodes 3,000 mm long, 250 to 253 mm wide and 10 mm thick. Butt joints are welded with three plate electrodes connected to the respective phases of a welding transformer. The electrodes are spaced 10 or 12 mm apart.

The width of plate electrodes is governed by the thickness of the workpiece. It is approximately one-third of the thickness of the job minus 20 to 25 mm. In welding with electrodes 10 to 12 mm thick, their length should be three times the height of joint (including the finishing tabs). As a rule, the actual length is somewhat greater (by 400 to 500 mm), so as to make up for the likely expansion of the deposited metal due to variations in the width of the gap. When a welding head is being set up for welding, plate electrodes are positioned in the middle of the gap so that the outer edges of the first and third electrode align with the surface of the parts to be welded (Fig. 241).

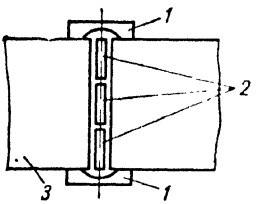

Fig. 241. Plate electrodes positioned in the groove in electric slag welding:
1 — copper backing strip; *2* — plate electrodes; *3* — workpiece

As has been already noted, the electric slag welding of stands is performed with two welding heads simultaneously. In fact, welding is started with one apparatus, and the other is switched on when the first one begins to operate steadily.

The welding conditions for the butt welds made in rolling mill stands are as follows:

Welding current per phase . .	1,200-1,300 a
Welding voltage	35-37 v
Speed of plate electrode feed .	1.2 m/hr
Number of electrodes	3
Electrode spacing	10-12 mm
Depth of slag pool	25-30 mm

A butt joint with an overall height of about 950 mm takes 90 to 100 minutes to complete by the electric slag process. After welding, the finishing tabs are removed by an oxygen torch. The kerfs are cleaned with an air chipping hammer and an emery wheel, and the stand is moved on for heat treatment which includes normalising and tempering. A general view of a stand welded with plate electrodes is shown in Fig. 242. Electric slag welds made in cast-welded stands of steel 25JI are remarkable for high quality and soundness. The mechanical properties of the welds and welded joints are given in Table 96.

The average chemical analysis of the welds made with electrodes of steel MC-1 and AH-8 flux is as follows: 0.19 per cent C; 0.72 per cent Mn; 0.27 per cent Si; 0.026 per cent S; 0.028 per cent P; 0.27 per cent Cr and 0.21 per cent Ni.

As has been noted earlier, stands and similar structures may be welded with slender wire electrodes. An example of structures welded

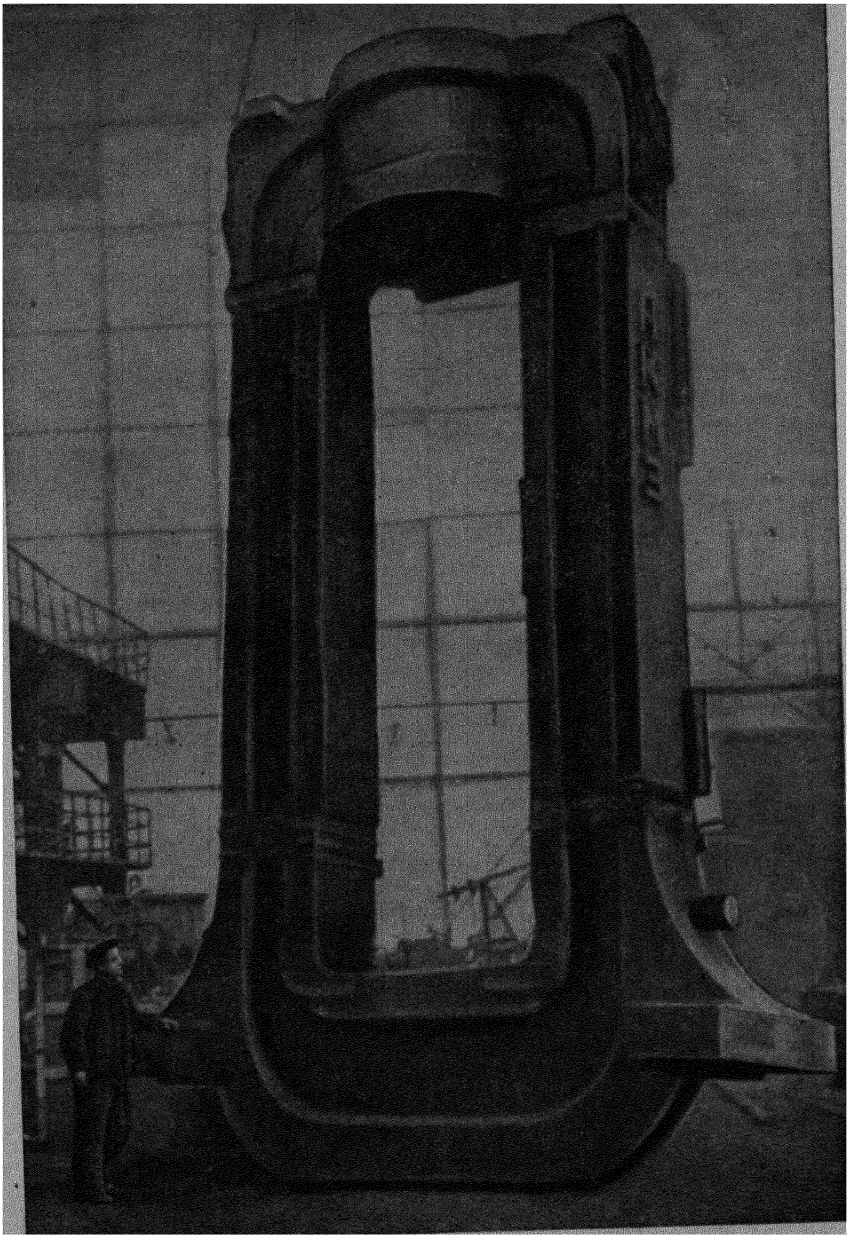

Fig. 242: Rolling mill stand welded with plate electrodes.

by the multielectrode electric slag process may be provided by the stand of a scale breaker with a cross section of 450 mm square at the joint. The electrode wire was Grade Св-08ГА, 3 mm dia, and the flux was ФЦ-7.

The welding conditions were as follows:

Number of electrodes	9
Electrode spacing	50 mm
Speed of wire feed	60 m/hr
Welding current per phase	600 650 a
Welding voltage	35-37 v
Depth of slag pool	40-45 mm

The electrodes were connected to each phase of the welding transformer in banks of three. The quality of the welds was fair. The main drawbacks of the method are complicated welding equipment and techniques.

An outstanding example of a cast-welded structure made by the electric slag process is provided by the crowns of heavy hydraulic presses.

Originally, the crowns were designed all-cast from steel 35Л. The fabrication of the first all-cast crowns showed that the further operations—hoisting, conveying, and machining—called for extremely powerful handling equipment because of the very large weight of castings (about 300 tons including cores).

For this reason, it was decided to cast crowns in two parts and to assemble them by the electric slag process.

Fig. 243 shows a crown half. The weight of the casting was about 150 tons. The crown was split across the middle in the longitudinal direction. In all, the crown had five butt joints. At two of them, the thickness of the wall was 260 mm with a length of 2,330 mm; at two other joints the thickness of the wall was 365 mm with a length of 2,330 mm; and at the remaining joint, the wall was 400 mm thick with a length of 3,220 mm. Prior to joining, the mating surfaces of the two halves were machined on a milling machine.

The crown was fitted up for welding in a horizontal position. One half was laid on a jig with the mating surfaces up. After it was checked for proper alignment, the other half was fitted up. The edges were separated by a tapering gap with suitable spacers. At the bottom of the joints the spacing was 30 mm wide, while at the top (level with the middle joint 3,200 mm high), it was 55 mm wide.

The tapering gap was made so as to compensate for uneven contraction along the joint during the welding of the first joints. After the fit-up, the assembled head was erected vertically. The joints were welded simultaneously with two A-372M welding sets.

The main difficulty in this case was that the completion of the first joints turned the remaining portion of the crown into a very rigid structure, and the welding of the other joints gave rise to appreciable stresses both in the cast metal and the welds. The danger of hot

cracking was aggravated by the high content and ununiform distribution of carbon in the casting.

To prevent cracking and failure of the structure, the following procedure was adopted.

Before the first joints were welded, the crown was heated with producer gas to 80 or 100° C throughout. The first two joints were welded simultaneously with two welding units. Before commencing the third joint, the workpiece was unevenly heated with gas torches on the inside. The top was heated more so as to widen the gap in the upper portion of the third joint. In welding the third joint, the heat-

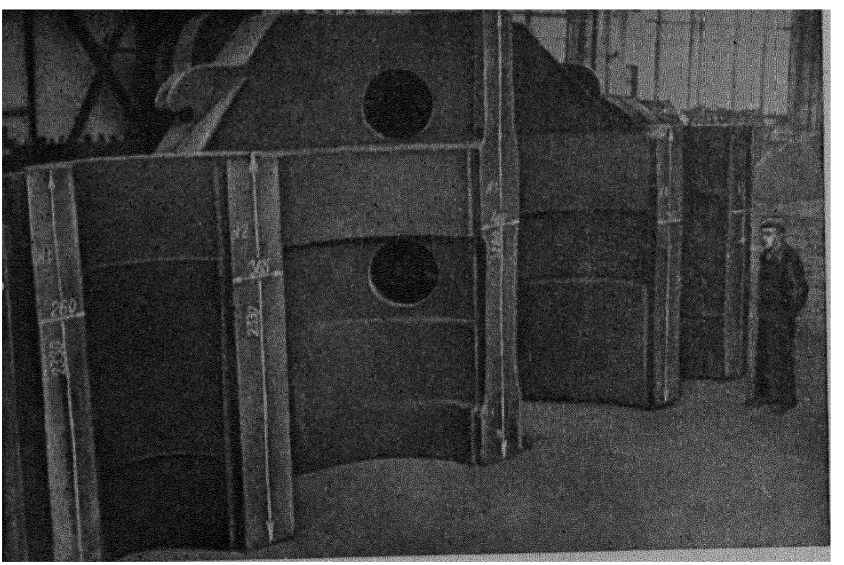

Fig 243 Half of the crown of a hydraulic press.

ing was stopped, so that the distortion brought about by the cooling of the workpiece could act in the same direction as it does in the cooling of the weld. In this way, stresses were relieved to a great extent.

The last two (fourth and fifth) joints were welded simultaneously by two welding units. Preheating was performed in the same way as on the third joint.

The wire was Grade Св-10Г2, 3 mm dia, and the flux was АН-8. The welding conditions were as follows:

Number of electrodes . .	3	Rate of weaving motion	39 m/hr
Speed of wire feed . .	160 m/hr	Dwell of electrodes at moulding shoes	5 sec
Welding current	400-420 a	Depth of slag pool . . .	40 mm
Welding voltage	50-52 v		

Immediately after welding the crown was normalised and tempered at high temperature. For a general view of the welded crown see Fig. 244.

Designing the crown in two halves, as has been described earlier, is not a happy solution, as the plane of split runs across the two cylinders and the two guide bores which are of smaller diameter, thus forming five joints. The welding of such a structure involves great difficulties for the following reasons.

1. Welding is performed by automatic machines under adverse conditions, in cylinders of a relatively small bore.

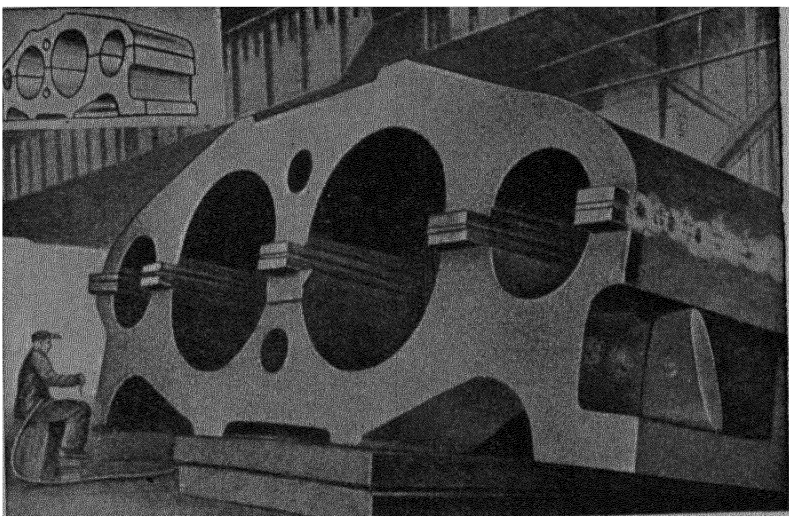

Fig. 244. Welded crown of a heavy hydraulic press.

2. It is extremely difficult to anticipate the distortion which is likely to occur in the five butt joints.

3. Both preparatory operations and welding are labour-consuming jobs.

At the present time, structures like the crown described earlier are designed with a split in a transverse direction, so that the plane of split runs along the transverse axes of the large cylinders and divides the workpiece into three parts. In this case welding is appreciably simplified, and it is possible to predict the distortion likely to take place in the two pairs of joints.

In cast-welded structures of some other shape, for example with one, three or five holes, the split is made in the plane containing the transverse axis of the middle hole, so that the workpiece is divided into two parts. These parts are simple to weld.

Apart from heavy unique structures, the electric slag process can be successfully applied to simpler and lighter articles such as the crossheads of 6,300 ton forging presses, rolling mill accessories (roller tables, walls for shearing conveyers of continuous billet mills), tyres for cement kilns and the like.

The crossheads of power forging presses with a force of 6,300 tons are made of two cast parts: a base weighing 30 tons and a shank weighing 7.5 tons, which are joined together by electric slag welding at two joints.

The crosshead parts are cast of steel 35. At the joints they are 280 mm thick. The joints are 800 mm high. The welding procedure is the same as for other articles of steel 35JI, and includes a preheat of 150 or 200° at the joints. The electrode wire is Св-08ГА or Св-10Г2, and the flux is АН-8.

A crosshead fitted up for electric slag welding is mounted on a jig. Welding is performed either with an A-372P or an A-401 welding apparatus. The joints may be made either consecutively or simultaneously with two welding heads. A general view of a crosshead and an A-401 welding unit positioned for welding is shown in Fig. 245. After welding, the crosshead is normalised and tempered.

Tyres for cement kilns are more difficult to slag-weld. A tyre is a ring made up of four segments. An example is provided by a cast-welded tyre with a cross section of 450×235 mm and an outside diameter of 4,200 mm. In slag welding such tyres two important points should be borne in mind: (1) tyres are made of steel 45JI with a high carbon content (up to 0.5 per cent); (2) distortion (bends) may take place at the joints and the length of the circumference may be different at the top and bottom of the tyre due to ununiform contraction along the height of the welds.

To prevent hot cracking in welded joints, the mating surfaces of the segments are heated to 200 or 300° C, and welding is performed with small currents.

It is strongly recommended to provide a tapering gap between the abutting edges so as to avoid twisting at the joints. At the bottom of the joint, the gap is usually 29 or 30 mm, while at the top it is 33 or 34 mm.

The welding equipment employed is either the A-372P or the A-372M using water-cooled copper backing strips. Two opposing joints should be made with two welding units simultaneously. The preparatory time for setting up and adjusting the welding units may be reduced by welding two or three tyres at a time, stacked one above another. The tyres should be separated by spacers 60 or 70 mm high so as to facilitate the subsequent parting into separate tyres. Welding is performed with Св-10Г2 wire and АН-8 flux. Post-welding heat treatment is tempering (heating to 500 or 550° and cooling in the furnace).

The welded joints of cast-welded structures are rather difficult to

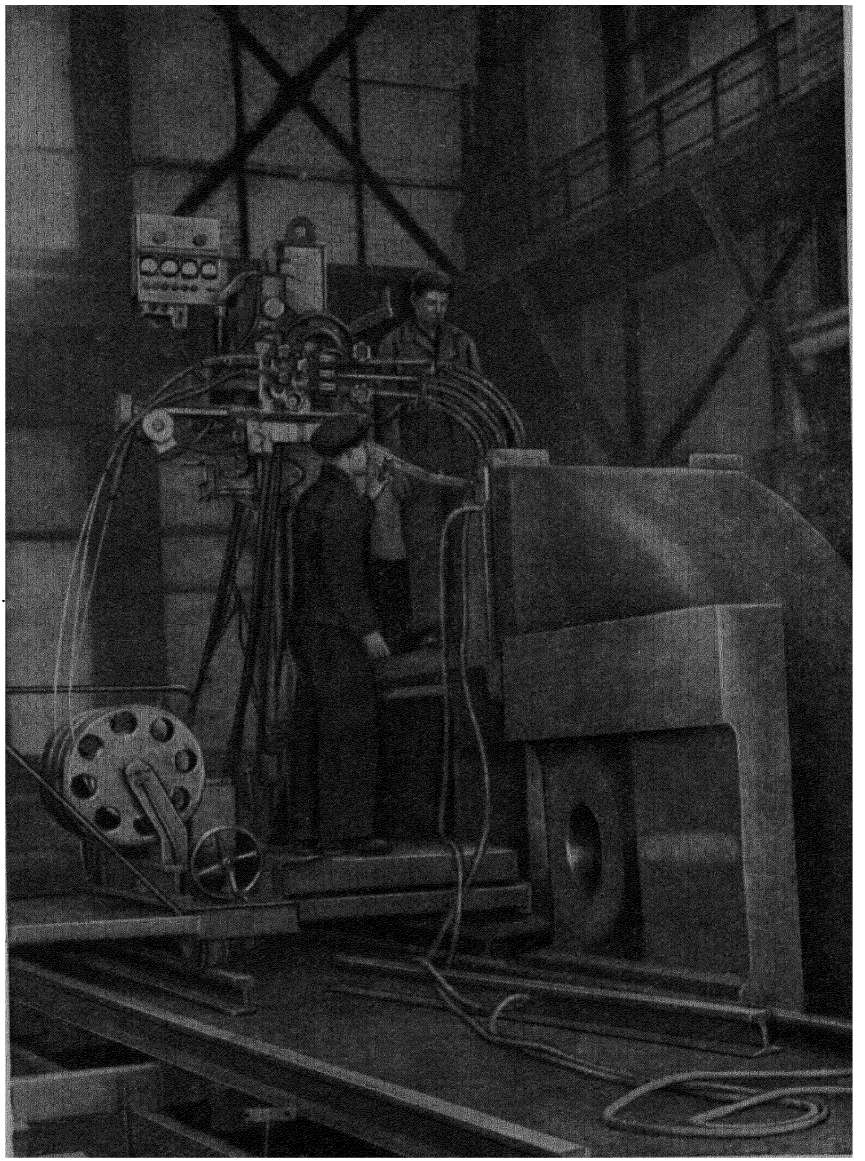

Fig. 245. Electric slag welding of the crosshead of a 6,300 ton power forging press.

control, for X-ray examination is out of the question because of the heavy section of workpieces. Ultrasonics is the most efficient quality control procedure. Ultrasonic fault detectors should be used preferably in conjunction with straight rather than oblique prods. Oblique prods may reveal defects in the parent rather than the weld metal, and judgement of weld quality may prove erroneous.

Data on the efficiency of electric slag welding as applied to cast-welded structures are scarce. According to one manufacturer, cast-welded rolling-mill stands differ little, in terms of fabrication costs, from all-cast stands. The explanation is that the savings on casting, fettling and machining barely compensate for the cost of fitting up and welding. However, the manufacturer finds it more profitable to make cast-welded frames, as in this case the total production time is reduced, and less work has to be done by the foundry, and by the special-purpose machine equipment of the works. Besides, with frames designed in a larger number of smaller parts, work may be distributed among a larger number of workers, and use can be made of mechanical moulding.

As can be seen from the electric slag welding of heads for heavy hydraulic presses, this process enables cast-welded structures to be made of practically any size and weight. This point is of important significance for the expansion of the production potentialities of engineering works without any addition to the existing physical plant.

3. Forged-welded Structures

The electric slag process has proved handy in the manufacture of some odd-shaped parts from forgings. These are cylinders for large hydraulic presses, shafts for hydraulic turbines, crankshafts, etc. The manufacture of all-forged crankshafts is a complicated job, while the manufacture of all-forged cylinders for heavy hydraulic presses is beyond the reach even of some large engineering works.

The quality of forged-welded structures depends mainly on the quality of the constituent forgings. Therefore, the materials for forgings and the forgings themselves should be thoroughly inspected for compliance with specifications.

Table 97

Steel grade	Chemical analysis, per cent				
	C	Mn	Si	S	P
				max	
30	0.27-0.35	0.5-0.8	0.17-0.37	0.045	0.040
35	0.32-0.40	0.5-0.8	0.17-0.37	0.045	0.040
45	0.42-0.50	0.5-0.8	0.17-0.37	0.045	0.040

The material for forgings may be carbon steels 30, 35 or 45. The chemical analysis and mechanical properties are tabulated in Tables 97 and 98.

Table 98

Steel grade	Yield point, kg/sq mm	Ultimate strength, kg/sq mm	Minimum elongation, per cent $l=5D$	Minimum reduction of area, per cent
30	29	48	41	50
35	31	52	20	45
45	34	60	16	40

In designing forgings to be welded into a larger composite work, two points should be taken into account. For one thing, the joints between the component parts should not be located at abrupt changes in section, sharp angles, etc., as stresses usually concentrate there; secondly, blanks for forgings should be properly taken out of an ingot so as to leave out gates and risers. The surfaces to be welded should be on the bottom side of the ingot.

An example of a well-designed forged-welded structure may be provided by cylinders for heavy hydraulic presses. A cylinder consists of a barrel 2,200 mm dia and a bottom, the wall of the barrel being 350 mm thick. The total weight of the cylinder is over 60 tons. Cylinders of this size have not yet been forged in one piece. Their manufacture has become possible only with the advent of the electric slag process. The barrel and bottom of a cylinder are joined together by a butt weld. The joint is some distance from the bottom. The position of the butt weld relative to the bottom is determined mainly by the size of the moulding arrangement mounted on the inside of the cylinder. To reduce labour requirements, the joint between the barrel and bottom should be placed preferably as close to the bottom as possible.

The blanks for a barrel and a bottom are roughed to a tolerance of not more than 0.5 mm on the outside and the inside diameter. The finishing allowance is at least 15 mm on each side. After preliminary machining, the outside and inside surfaces of the barrel should be free from black spots, especially near the edges of the joint and also where the barrel bears on roller supports. Prior to the fit-up, the surfaces to be welded should be thoroughly cleaned of dirt, oil and rust. It is advisable to fit up the barrel and bottom for welding in a vertical position. Before fitting up the two parts, starting tabs should be tack-welded to the end face of the barrel. The backing-up strips which are also tack-welded to the workpiece, should be as high as the gap is between the barrel and bottom.

The cylinder is fitted up for welding on a jig in a vertical position, with the end of the barrel placed upwards. The bottom is then placed

on the barrel and fastened to it by means of fit-up strips. The gap between the barrel and bottom is of variable width. The maximum width of 36 mm is at approximately one-eighth of the way out from the beginning of the weld (in the direction of rotation of the cylinder). At the opposite end the gap is 30 mm wide.

The cylinder thus assembled is then mounted on the roller bed of the welding unit and is coupled to the cardan shaft of the drive.

The outfit for the electric slag welding of cylinders for hydraulic presses and other articles with circumferential seams (shafts for hy-

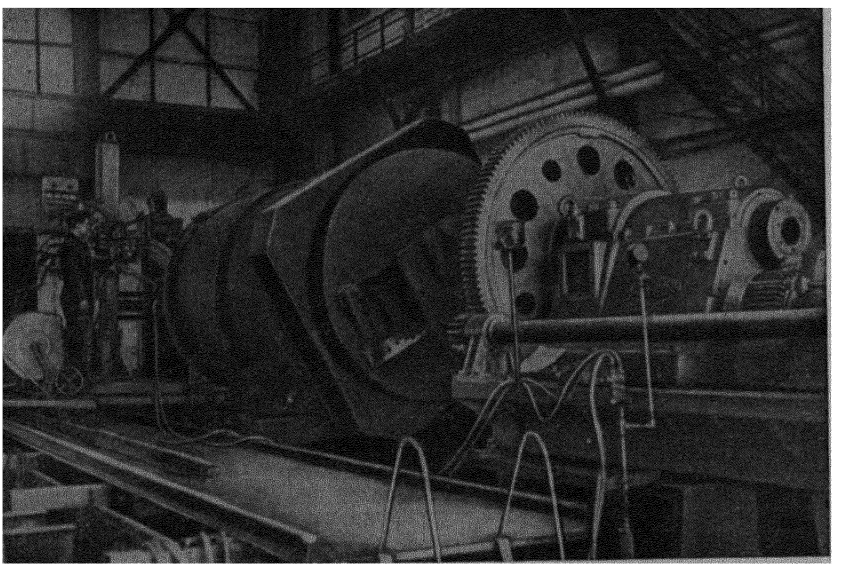

Fig. 246. General view of an automatic welding unit for girth seams on cylinders.

draulic turbines and the like) may be set up of non-standard pieces of welding equipment. Incidentally, the welding outfit at the Novo-Kramatorsk Engineering Works has been set up in this way. It includes an A-401 welding apparatus, a rotator, a roller bed, a rail track, a closed-circuit water-cooling system, the suspension for the inside moulding shoe, etc.

The roller bed was made at the works. A general view of the welding outfit, with a cylinder mounted on it, is shown in Fig. 246.

After a cylinder is mounted on the roller bed, the platform carrying the welding apparatus is brought close to the joint to be welded, so that the electrode carriers are in one plane with the joint. Prior to welding, the cylinder is preheated with gas torches. The temperature of the edges to be welded should be at least 150° C. They are

heated both on the inside and the outside. In preheating, care must be taken to heat the workpiece evenly. The difference in temperature round the seam and throughout the bottom should not exceed 50°C. Preheating is essential for the prevention of hot cracks at the beginning and, especially, at the end of the weld. This technique also minimises the tendency of the parent metal to brittle failure.

It is particularly important to reheat the beginning of the weld before the seam is completed. After heat is removed from the beginning of the weld, a gradual contraction takes place when the seam is completed, affecting a fairly large area of metal ahead of the place of welding. In this way, the edges are brought closer together before the seam is completed, and the rigidity of the final length of the circumferential seam is reduced.

The sequence of operations in the fit-up and electric slag welding of a cylinder is roughly as follows.

A copper moulding shoe is mounted on the inside of the cylinder. The shoe is held tight to the workpiece by a suspension which is a portable three-beam support with a short shaft and a link. The welding apparatus is set up for welding on the outside of the cylinder. The welding conditions for the beginning, the middle portion and the closing length of the weld are different. Changes affect the speed of wire feed, welding voltage, and, on some portions of the weld, the dry length of the electrode and the depth of the slag pool. The welding conditions for the circumferential seam of a cylinder are tabulated in Table 99.

Table 99

Welding variables	Beginning of weld	Middle portion	Closing length
Speed of wire feed, m/hr	120	187	187-52
Voltage per electrode, v:			
bottom	50	48	40
middle	50-48	48	43-40
top	50-46	48	46-43-46
Rate of weaving motion, m/hr	40	40	40
Depth of slag pool, mm	50-40	40	40-30
Dry length of electrode, mm	100-70	70	70-80
Dwell of electrodes at moulding shoes, sec	5	5	5
Electrode spacing, mm	—	$\frac{+15}{3}$	—

As has already been noted, the closing of a circumferential seam is a delicate operation largely determining the quality of the weld. Prior to closing, the beginning of the weld should be cut out to a templet by means of a suitable gas torch. The cut should be started

on the inside of the workpiece after it has been turned through one-eighth of the way from the initial position. After deseaming, the beginning of the weld should be free from defects: poor fusion or penetration, cracks, gas pockets, etc. The kerf should be 28 to 32 mm wide. Care must be taken to make as straight a cut as possible and to clean the edges thoroughly of scale. In closing the weld, the welding space across the thickness of the metal varies continuously. Therefore, it is necessary to vary the electrode spacing and the swing of the weaving motion. Diagrammatically, the closing of a circumferential seam is shown in Fig. 95.

The closing technique for circumferential seams was described in detail in the chapter dealing with the welding technique for circumferential seams in general. Fig. 246 gives a general view of a unit for the electric slag welding of cylinders for hydraulic presses. These cylinders are made from steel 35, using Св-10Г2 wire and АН-8 flux. The mechanical properties of the weld metal are given in Table 100.

Table 100

Yield strength, kg sq mm	Ultimate strength, kg/sq mm	Elongation, per cent $l=5D$	Reduction of area, per cent
30.7-32.3 / 32.6	51.8-52.3 / 52.1	30.3-32.3 / 31.2	62.4-64.0 / 63.0

According to the table, the welds made in steel 35 with Св-10Г2 wire meet the strength requirements of the relevant standards and are superior to them in terms of ductility.

Slag-welded circumferential seams are remarkable for their high quality. The welds are free from all defects, provided the operator has followed the welding instructions. Special attention should be paid to the closing of the weld. After welding, the cylinder should be normalised and tempered. The quality of the weld is inspected visually and with an ultrasonic fault detector.

The electric slag process is especially efficient in the fabrication of thick-walled high-pressure vessels, and may prove so in the manufacture of crankshafts. As has been already noted, forged crankshafts are difficult and labour-consuming to make. Currently, work is under way to replace all-forged crankshafts by welded ones. A welded crankshaft may consist of forged components or blanks made of plate.

The layout of the welded joints between the component parts depends on the outline, weight and size of a given shaft. The welded joints may be located on the webs of the crankpins or on the shaft journals (Fig. 247).

The components of a crankshaft may be assembled by welding with wire or plate electrodes. The number of wire electrodes or the

size of plate electrodes is determined by the thickness of the workpiece.

Crankshafts can be successfully welded by the resistance slag process. The components of crankshafts are welded with either wire or plate electrodes by the technique usually employed when welding compact sections. It is advisable to fit up and weld crankshafts on a suitable jig, on which the shaft components may be quickly mounted and clamped in place. Welding may be performed with either an A-372M or an A-372P welding apparatus.

The welding procedure varies with the material of the crankshaft. In most cases, crankshafts are made from steel 45 which requires preheating. In view of the service conditions of crankshafts and because of the post-welding heat treatment they are given, it is advisable to have weld metal of the same chemical analysis as the parent metal. This may be obtained by using plate electrodes made from steel 45.

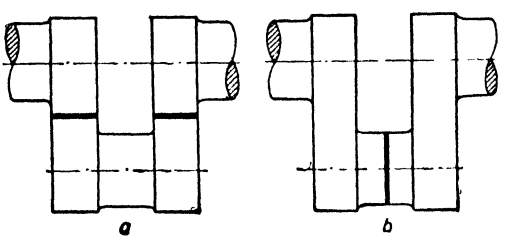

Ftg. 247. Forged-welded crankshaft:
a — welded joint across web; *b* — welded joint across shaft journal.

Resistance slag welding may be applied to crankshafts of both round and rectangular cross section, especially if the component parts are joined together at a journal. This reduces the number of welded joints and simplifies the welding equipment required. It is not unlikely that a universal welding outfit may be developed for various sizes of crankshafts.

The electric slag process can sharply reduce the amount of forging work. The labour requirements in the fabrication of crankshafts may be further cut down by replacing forged components by rolled parts.

In some cases girder-type structures have to be made. They are too complex and inconvenient to forge. In such cases, it is advisable to design them in smaller and simpler parts for forging and to weld the forgings into a finished structure by the electric slag process.

An example in point is provided by ingot tipper bars. They are made of steel 35 and measure $9{,}000 \times 500 \times 140$ mm and $12{,}000 \times 600 \times \times 160$ mm, respectively. Each bar consists of three parts. The parts are lined up for welding and welded on a welding outfit incorporating a fixture and an A-372M or an A-372P welding apparatus. Fig. 248 shows this unit welding an ingot tipper bar. The welds are made with a Св-10Г2 wire and АН-8 flux.

Information about the efficiency of the electric slag process as employed in the fabrication of forged-welded structures is far from

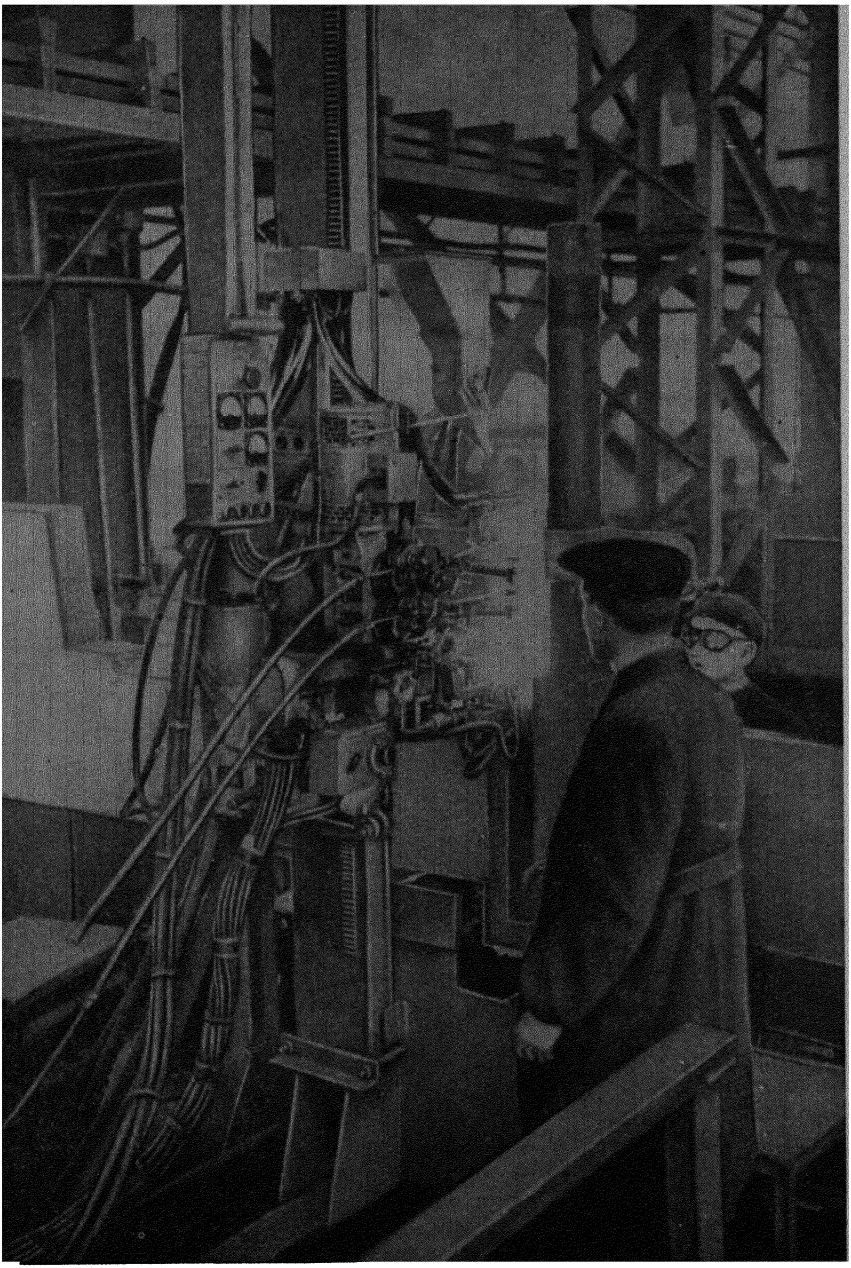

Fig. 248. Electric slag welding of an ingot tipper bar for a blooming mill.

complete. By way of example, one manufacturer has reduced the production time of power cylinders for hydraulic presses from 90—the time needed to make all-forged cylinders—to 67 days. Metal consumption has also been reduced from 220 tons to 180 tons, while the fabrication costs of a forged-welded cylinder are much less than those of an all-forged cylinder.

4. Composite Structures from Plate, Forgings and Castings

Among welded structures made by the electric slag process there are some consisting of cast and forged components, or of cast parts and components made from plate.

For example, the frame of a forging press has parts which are forged, cast or rolled. The shafts of hydraulic turbo-alternators are made from forged and cast parts; the hydraulic cylinders of walking excavators are also combined from forgings and castings.

The considerations governing the electric slag welding of composite structures are the same as for the electric slag welding of castings, forgings and plate discussed earlier.

Here are a few examples of composite structures made by the electric slag process.

The welded frames of forging presses consist each of two uprights, a cast crosshead (steel 25 JI), a forged shaft (steel 30) and connecting elements: lids, bedplates, etc. The total weight of rolled parts is 55.3 tons; the weight of the castings is 28.1 tons, and of the forgings, 6.7 tons. An upright of a press consists of two U-shaped halves and a pedestal of a box section (Fig. 249). The uprights are made from steel 3 plate 60 and 80 mm thick. The pedestal, which is the middle part of the upright, is made of rolled sections 80 mm thick.

The sequence of operations in the fit-up and welding of press frames is as follows:

1. The pedestal is fitted up and welded by the electric slag process.
2. The pedestal is heat-treated to relieve residual stresses.
3. The upright halves are fitted up and welded to the pedestal.
4. The upright is heat-treated to relieve residual stresses.
5. The uprights and the cast crosshead are fitted up and welded together.
6. The uprights and the crosshead are heat-treated together to relieve residual stresses.
7. The connecting elements of the frame are fitted up and welded.
8. The welded frame is heat-treated.

The individual components of the frame and the frame as a whole are fitted up for welding on conventional plating blocks. The pedestal and upright halves are fitted up for welding simultaneously and independently of each other. The sides of the pedestal are first

to be lined up by means of auxiliary gussets. The gap between the sides is 25^{+3} mm. The edges may have an offset of not more than 3 mm. The starting and finishing tabs should be tacked before welding.

The sides of the pedestal and the other components of the frame may be welded by an A-372M or an A-372P welding unit. The joints in the pedestal may be welded either consecutively or simultaneously by two welding heads (making two welds at a time). In welding the sides, use is made of copper backing-up strips. After the sides have been welded, the top and bottom plugs are inserted, and slag-welded with fusible steel backing-up strips. The joints of the upright halves are not tack-welded. The joints of the upright may be as high as 5.5 m. Consequently, the operator stands on a suitable lifting platform or scaffolds.

The joints of an upright are welded as follows: first to be welded are the joints between the upright halves and the pedestal; they are then followed by the longer joints. For a general view of the electric slag welding floor for uprights see Fig. 250.

Welding results in residual stresses which concentrate at abrupt changes in section. These stresses may develop into cracks. To prevent that, the welded upright should be annealed. Upon heat treatment, a cut is made in the upright for the cast crosshead. It is not advisable to make a cut prior to heat treatment, as changes in the cross section of the upright at the cut may result in appreciable deformation of the upright. The crosshead is a casting of steel 25JI. In casting, risers and gates should be placed away from the surfaces to be welded. If these surfaces have defects, they should be repaired before the crosshead is mounted on the uprights.

For the reasons of design, it is not possible to weld all the joints between the uprights and the crosshead by the electric slag process. Therefore, after the uprights and the crosshead have been fitted up, only four outside joints are welded by the electric slag process. The four inside joints between the crosshead and the uprights, being inaccessible to electric slag welding, are welded manually. After the forged shaft and connecting elements are welded to the frame, it is tempered to relieve residual stresses. A general view of a welded frame is shown in Fig. 251.

The welding conditions for the frame are as follows:

Joint gap for plate thicknesses:	
80 mm	25-28 mm
150 mm	27-30 mm
Offset of edges	3 mm
Wire diameter	3 mm
Electrode wire	Св-08ГА
Number of electrodes	2
Speed of wire feed	200-250 m/hr
Electrode spacing	40 mm
Rate of weaving motion	26-31 m/hr
Welding current	500-550 a per electrode

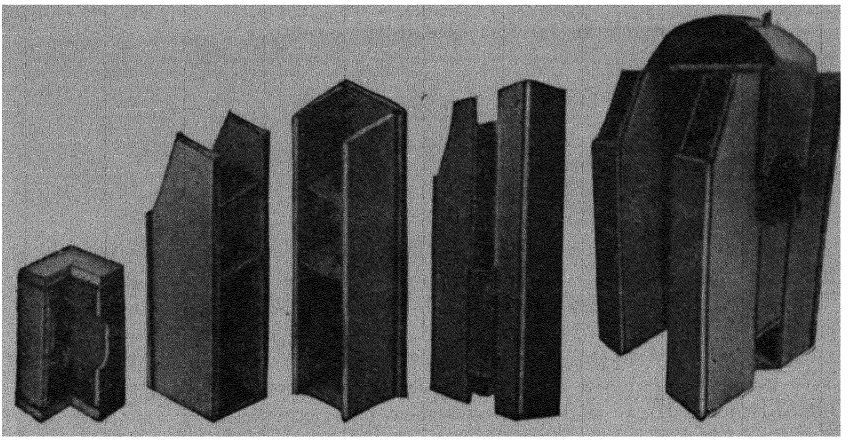

1 2 3 4 5

Fig. 249. Parts of the frame of a 4,000 ton forging press:
1—middle portion of upright; *2*, *3*—upright halves; *4*—upright; *5*—right-hand and left-hand uprights and cast crossbead assembled.

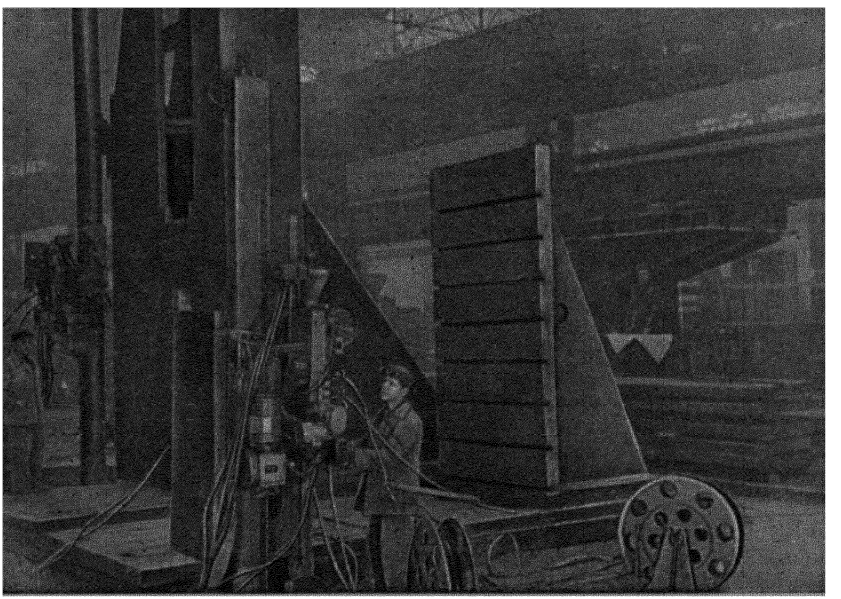

Fig. 250. General view of a station for the electric slag welding of uprights for forging presses.

Voltage at electrodes for plate thicknesses:	
80 mm	42-44 v
150 mm	44-48 v
Distance between electrodes and moulding shoes	8 mm
Dwell of electrode at moulding shoe	5 sec
Dry length of electrode	60-70 mm
Depth of slag pool	40-50 mm
Flux	АН-8 or ФЦ-7

In slag-welding steel 3 with Св-08ГА wire and АН-8 flux, the mechanical properties of welded joints are as shown in Table 101. The average chemical analysis of a weld is 0.11 per cent C; 0.84 per cent Mn; 0.06 per cent Si; 0.024 per cent S; and 0.028 per cent P.

Tests of welded joints and welds have proved their high quality. The mechanical properties of the welds and welded joints are comparable with those of the parent metal (Grade 3 steel).

Composite welded structures incorporating rolled sections and castings are also of a high quality. This has been borne out by mechanical tests of the joints between rolled sections and castings (Table 102).

The welds are inspected for quality by visual examination and with gamma-rays. Defects are repaired by manual welding. Repairs are usually performed with the concurrent heating of the faulty place.

The frames of forging presses were first to be designed for electric slag welding. This is why they have some drawbacks in design:

1. In the pedestal, three welds intersect one another in the corners of the top and bottom plugs. Appreciable residual stresses concentrate at these places, and cracking may occur there.

2. Sharp changes in section, for example, between the pedestal and the uprights or between the uprights and the crosshead, may be conducive to heavy concentration of stresses with the resultant danger of cracking.

3. The critical inside joints between the crosshead and the uprights are inaccessible to the electric slag process.

These drawbacks should be eliminated in the development of structures specifically designed for the large-scale use of electric slag welding.

Another example of a composite structure may be provided by the shaft of the hydraulic turbine made for the Varvarino Hydropower Station. Schematically, the welded shaft is shown in Fig. 252. The length of the shaft, including the flange, was about 7,000 mm. The diameter of the shaft upon roughing was 760 mm, while the wall of the shaft was 200 mm thick. The flange was 2,000 mm in dia. This shape of the shaft is extremely inconvenient for forging, and the forging operation is too expensive and labour-consuming. The junction between the hollow shaft and the flange is especially inconvenient for forging. Inadequate forging action at this place produces metal of low quality. A welded shaft, on the other hand, consists

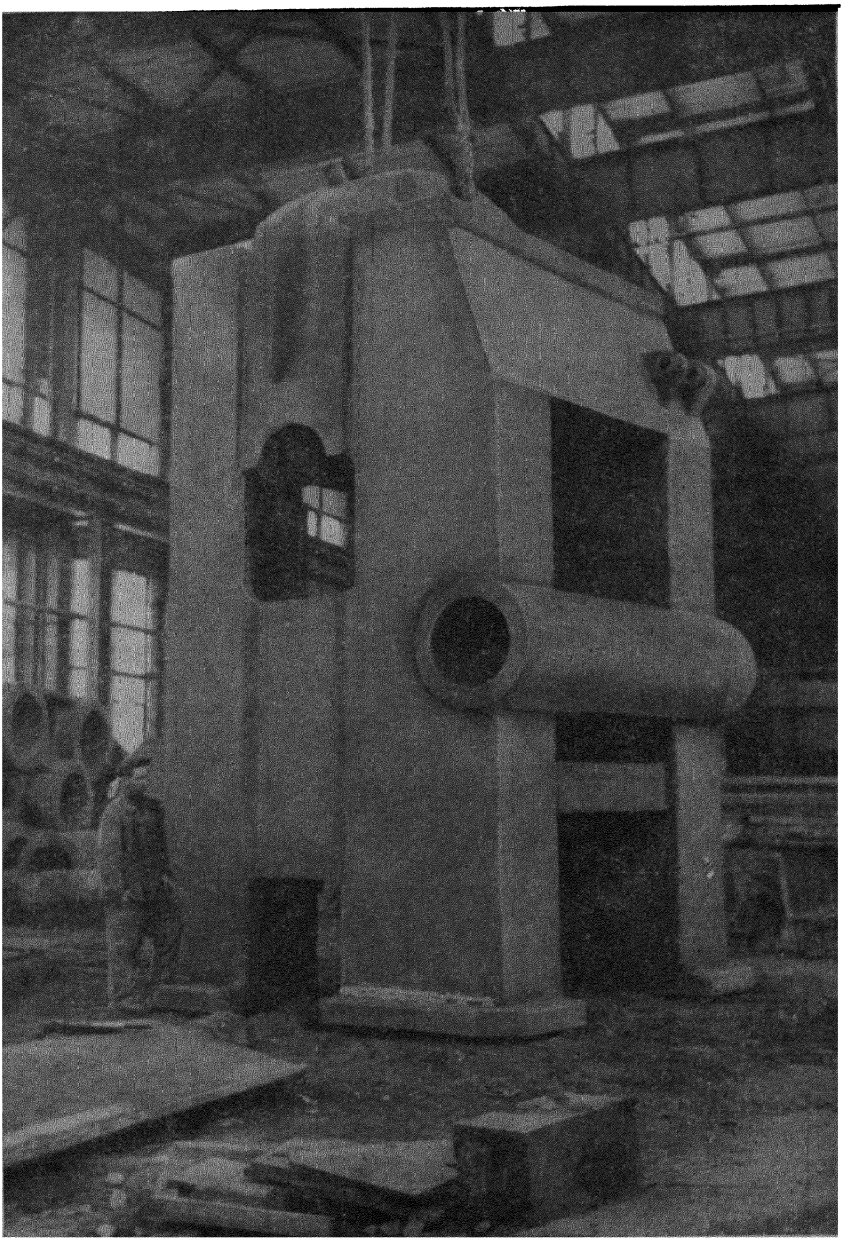

Fig. 251. General view of a welded frame.

Table 101

Ultimate strength, kg/sq mm	Yield strength, kg/sq mm	Elongation, per cent $l=5D$	Reduction of area, per cent	Impact toughness, kgm s. cm	
				specimen notched at axis of weld	specimen notched in coarse-grained area of weld-affected region
39.2-42.8 / 40.3	23.6-26.8 / 24.8	28.0-35.7 / 31.1	59.4-74.3 / 68.3	5.25-13.8 / 11.0	7.1-14.9 / 11.5

Table 102

Metal	Ultimate strength, kg sq mm	Yield strength, kg/sq mm	Elongation, per cent $l=5D$	Reduction of area, per cent	Impact toughness, kgm sq cm	
					weld	coarse-grained area of weld-affected region
Weld	44.7-46.7 / 45.2	24.8-27.7 / 26.1	31.3-33.3 / 31.5	50.4-69.6 / 60 1	8.8-10.3 / 9 7	5.8-10.2 / 8.5
Parent metal (plate) . .	39.4-42.7 / 41 5	19.1-22.6 / 20.3	29.8-30.0 / 29.9	53.7-61.5 / 58.8	—	—
Cast steel 25Jl	45.0	24.1	19.0	30.0	—	—

of two forgings: a hollow tube and a flange. The weight and cost of the shaft can be further reduced by replacing the forged flange by a cast one. The reduction is owing to smaller allowances for casting than for forging. Besides, the unit cost of such a casting is appreciably lower than that of a forging.

The shaft tube was forged in Grade 30 steel, and the flange of the shaft cast in steel 25Л. When casting the flange, the risers and gates were located on the outer side of the flange. The shaft was assembled upon roughing. The joint gap between the flange and the shaft was 25 to 26 mm. The joint was tack-welded by transverse strips. The assembled shaft was mounted on the roller bed of a special-purpose welding unit. Both its design and the welding technique for this type of seam were described earlier. Fig. 253 shows this shaft in welding. Use was made of Св-08ГА wire and АН-8 flux. The edges were preheated to 100 or 150°. After welding, the shaft was normalised and tempered. Before the shaft was put into a furnace, the weld and adjoining areas of the shaft and flange were maintained at 60 to 100° C.

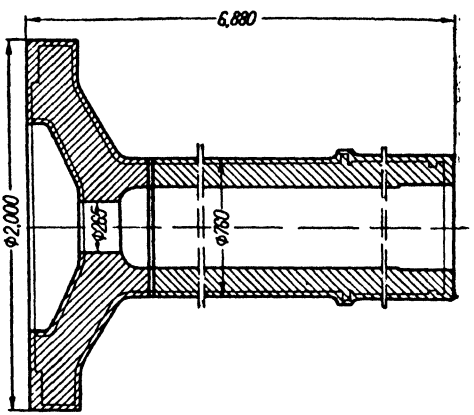

Fig. 252. Shaft for a hydraulic turbine.

The welds were inspected visually and with gamma-rays. The mechanical properties were determined on coupons in the form of two rings 100 to 200 mm wide which were cut out of the blanks of the flange and shaft tube at the joint end. The test specimens were heat treated simultaneously with the welded shaft. The results of the mechanical tests are presented in Table 103.

Table 103

Ultimate strength, kg sq mm	Yield point, kg/sq mm	Elongation, per cent $l=5D$	Reduction of area, per cent	Impact toughness, kgm/sq cm
43.2-44.5	24.3-25.7	30.3-33.7	65.7-69.4	9.0-13.6
43.9	25.2	31.5	67.0	12.3

In all, three shafts for the Varvarino Hydropower Station have been successfully welded by the electric slag process.

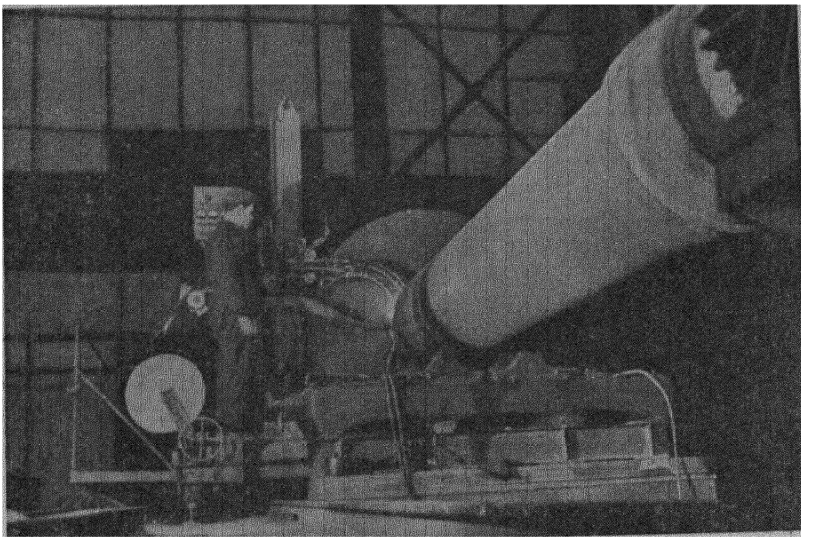

Fig. 253. Electric slag welding of a shaft for a hydraulic turbine.

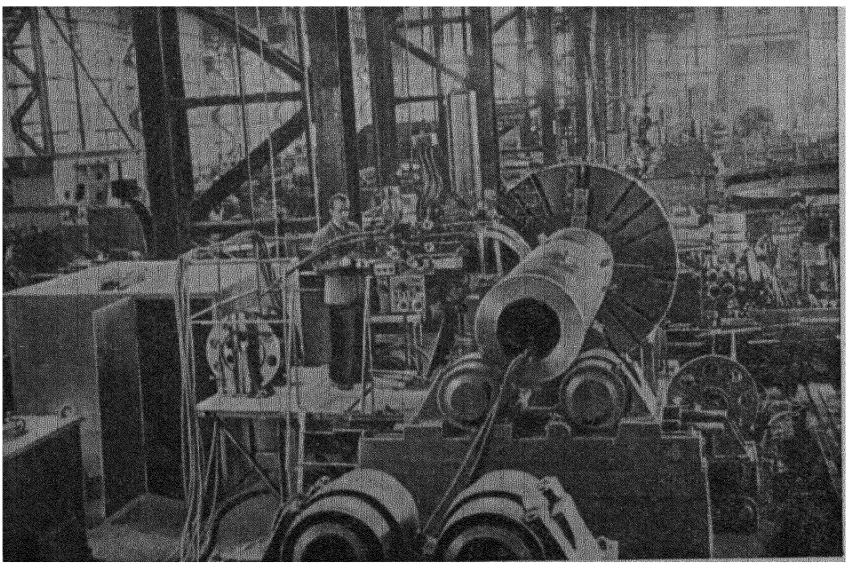

Fig. 254. Cylinders for walking excavators welded by the electric slag process.

The electric slag process substantially cuts the production time and costs of composite welded structures. For example, the frame of a 4,000 ton press made by the electric slag process weighs about 25 tons less than an all-cast one, while the production time is halved. As for frames for 6,300 ton presses, the production time is 30 days shorter and a composite frame weighs 40 odd tons less and is approximately 25,000 rubles cheaper than an all-cast one.

The welded shafts for the Varvarino Hydropower Station have saved 42 tons of metal each and about 72,000 rubles in all. Much money is saved in the fabrication of power cylinders for walking excavators. A welded cylinder takes 20 tons less steel and up to 40 per cent less time for fabrication than an all-cast cylinder.

A cylinder for a walking excavator is a composite article made up of a barrel weighing up to 6.5 tons, and forged from steel 35, and a cast head up to 7 tons in weight. The bore of the main cylinder is 750 mm, and its walls are 140 mm thick. The length is over 2,000 mm.

Such cylinders are fitted up for welding and welded by the same procedure as cylinders for hydraulic presses.

Inside welds are backed up by copper moulding shoes, copper or fusible steel backing strips. As the diameter of a cylinder is relatively small, while its length is large, copper moulding shoes are less convenient, as they stand in the way of the operator watching the progress of the weld. Welding units for the fabrication of power cylinders for walking excavators are similar to those used for welding cylinders for hydraulic presses. A general view of such a unit is shown in Fig. 254.

Cylinders are given a preheat and welded with Св-10Г2 electrode wire and АН-8 flux, and are normalised and annealed upon welding.

5. Electric Slag Welding of Heavy-gauge Reinforcing Bars

The reinforcement employed in hydraulic works, skyscrapers and large industrial structures is made up of bars 20 to 100 mm in diameter. The manual welding technique with straps is obviously out of date. For one thing, it does not produce welds of the desired quality. Secondly, it takes more metal and more time.

Conventional resistance butt-welding machines can only make single butt welds in the flat position. The specialised machines manufactured by the Elektrik Works can weld reinforcing bars at the shop.

However, the electric slag process is the most efficient and economical as far as reinforcing bars are concerned, although what is known as the bath method also finds some use.

The bath method consists in that the ends of the bars to be welded are melted by the heat generated by an open arc in a pool of molten metal.

In the case of horizontal butt welds, the metal pool is retained by fusible back-ups. In the case of vertical butt welds, the back-ups are dished. They are tack-welded to the lower bar, while the end of the top bar is double V'd to an included angle of 30 or 35°.

Welding is started by dipping an electrode into the gap between the ends of the bars which are placed on a steel back-up. Then the arc strikes, and the electrode is moved along the gap, sweating the lower edges of the bar ends. The electrode is moved back and forth in the gap until it fills with metal.

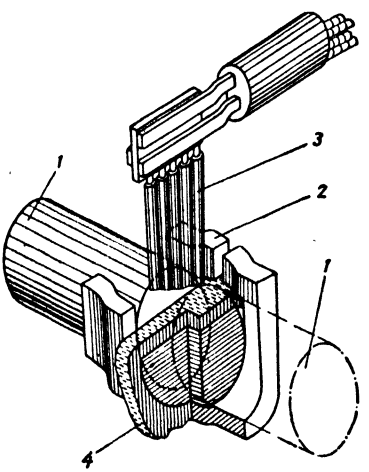

Fig. 255. Multielectrode welding of reinforcing bars with slag run off:
1 — bars being welded; *2* — steel backing strip; *3* — electrodes; *4* — slag.

As soon as one electrode is consumed, another one should be melted without any interruption. Use is usually made of electrodes 4 and 5 mm in diameter with the УОНИИ 13/55 covering. A modified bath method employed for field welding uses a number of electrodes at a time, and steel back-ups, with the slag run off (Fig. 255). Still another multielectrode modification of the method suitable for shop welding depends on a copper mould. Both the steel and the copper backing strips are made of two halves, which are aligned with a gap widening towards the top, for tapping the slag which is formed when the УОНИИ 13/55 covering melts. In welding, the arc quickly travels from one electrode in the cluster to another. The cluster is lowered as the electrodes melt away. The welding conditions for this method are tabulated in Table 104.

The bath method just described has been used in the construction of ferro-concrete foundations for skyscrapers. Despite its simplicity, it is not free from serious drawbacks. Among other things, the upper bar has to be bevelled for welding in the vertical position and a special station has to be provided for making fusible back-ups in the form of clamps or dishes.

Much metal goes into fusible back-ups, as their thickness should be more than 18 mm. An 18 mm back-up employed on bars 40 mm in diameter and welded with a spacing of 20 mm and a current of 500 to 600 a will burn through.

Table 104

Bar dia, mm	Gap, mm		Electrode dia, mm	Number of electrodes for recommended gap and electrode dia, mm			Welding current, a
	Least and recommended	Max		4	5	6	
25-32	9	12	4	4	—	—	325
36	10	15	4-5	5*	6	—	350-500
40-45	11	18	5	—	8	—	650
50-55	12	21	5-6	—	7*	5*	550-650
60	13	25	5-6	—	10*	7*	700
70	14	28	6	—	—	9*	700

* Welded with two clusters of electrodes placed in tandem.

When in 1953 the Electric Welding Institute developed the electric slag process, another method for welding reinforcing bars

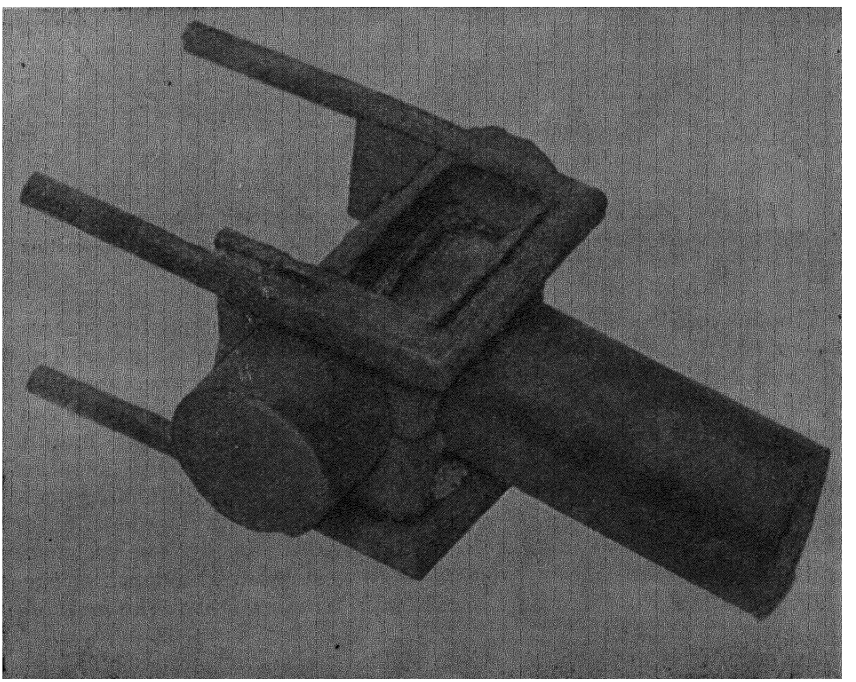

Fig. 256. Water-cooled mould for the electric slag welding of reinforcing bars.

with a portable automatic head [2] was suggested. Welding is performed with one or two electrodes 5 mm in diameter and ОСЦ-45, АН-348 or ФЦ-6 flux. The head is powered by a ТСД-1000 or a СТЭ-34 welding transformer. No edge preparation is required, and the spacing of the edges to be welded is 20 mm. The welding current should be more than 600 or 700 a so as to obtain complete penetration on bars 40 mm or more in diameter.

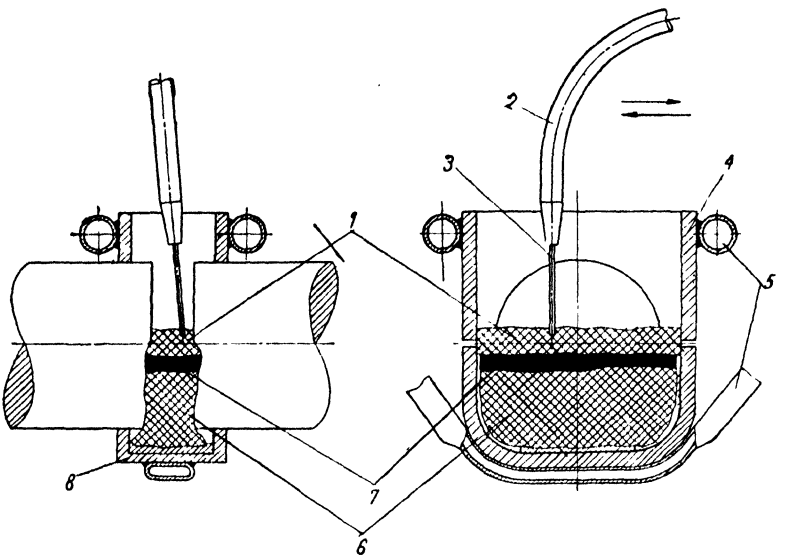

Fig. 257. Semi-automatic electric slag welding of reinforcing bars:
1—slag pool; *2*—electrode carrier; *3*—electrode; *4*—moulding arrangement; *5*—cooling water pipes; 6—weld metal; *7*—metal backing strip; *8*—fit-up strip.

Use has also been made of the semi-automatic electric slag process to weld butt and corner joints on bars 30 to 80 mm in diameter. The method consists in that two bars are lined up with a spacing of 20 or 25 mm. The edges of the bars are prepared for welding with a gas torch. The joint is then enclosed in a water-cooled copper mould (Fig. 256). The equipment employed is the ПШ-5 standard portable welder using Св-08 electrode wire 2.5 mm in diameter. The slag pool is obtained in the pocket placed on top of the mould. The bottom of the mould is lined with a graphite backing strip so that the arc may conveniently be initiated when the weld is started. The depth of the slag pool should not exceed 15 or 20 mm. Schematically, the method is shown in Fig. 257.

In welding, the electrode guide should be moved across and forward in the direction of the weld. Power for the welder is drawn from a welding transformer or a d.c. generator. In the latter case, the

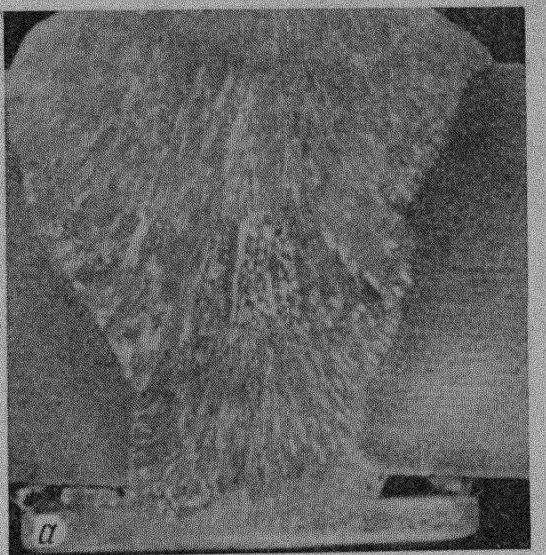

Fig. 258. Macrographs across welded joints made in reinforcing bars 60 mm in dia by the semi-automatic electric slag process:
a — butt joint; *b* — corner joint.

current should be of reversed polarity. The welding conditions are as follows: speed of wire feed, 170 m/hr; welding current, 400 to 425 a; welding voltage, 35 v. These conditions are suitable for bars 30 to 80 mm in diameter. The welding time decreases with increasing current.

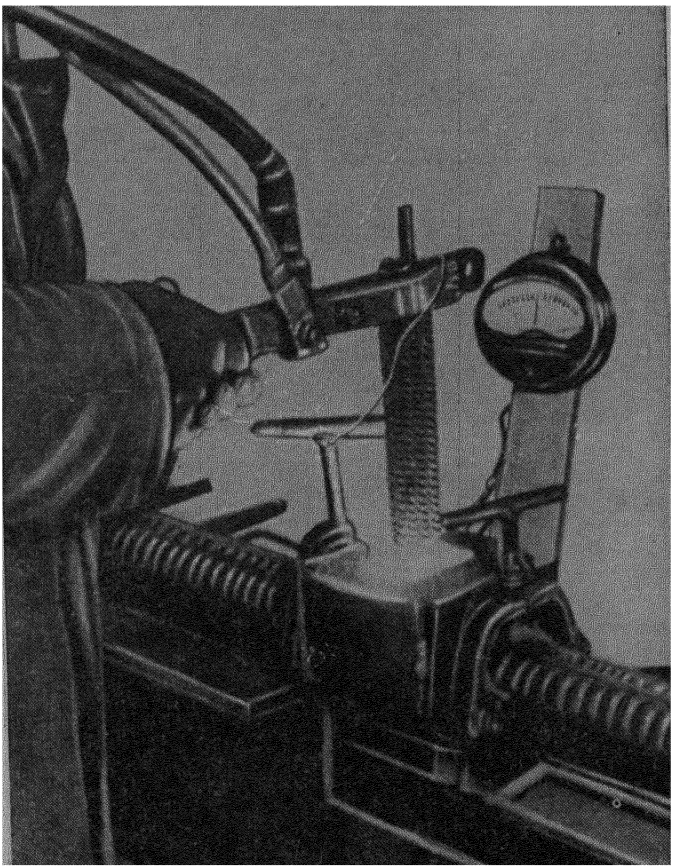

Fig. 259. Reinforcing bars welded by Y. I. Neshchadim's method..

Figs. 258*a* and *b* are macrographs of a corner and a butt joints made on bars 60 mm in diameter by the semi-automatic electric slag process. As can be seen, the weld metal is dense and free from gas pockets and slag inclusions. Tensile tests of corner joints in bars 60 mm in diameter have proved the efficiency of electric slag welding. All specimens failed in the parent metal.

Apart from the ПШ-5 portable welder developed by the Electric Welding Institute, use is made of the ДЭШП portable welder and the ЛИВТ-5 welding gun weighing 1.8 kg, which is mounted on a ЛИВТ pedestal. When two wire electrodes are used, power is drawn from two transformers which have their winding connected in an open delta.

Operator Y. I. Neshchadim has suggested a semi-automatic electric slag method for welding reinforcement bars with clusters of bare steel rods or steel plates in conjunction with АН-348 flux (Fig. 259). The advantage of this method is its simplicity. However, it suffers from a serious drawback—the weld metal is of a relatively low quality, as much phosphorus goes over from the АН-348 flux into the weld. The quality of the weld metal can be appreciably improved by using rods (or plates) and a flux of the appropriate chemical analysis.

TO THE READER

The Foreign Languages Publishing House would be glad to have your opinion of the translation and the design of this book.

Please send all suggestions to 21, Zubovsky Boulevard, Moscow, U.S.S.R.

ЭЛЕКТРОШЛАКОВАЯ СВАРКА

Printed in the Union of Soviet Socialist Republics